X-Y Positioner System

Specifications (Revision)

Introduction

This acquisition is for an X-Y Positioner system for use in a government anechoic chamber. The X-Y Positioner system will be part of a closed-loop simulation facility in which an RF receiver is mounted on a flight table and RF signals are transmitted from two standard gain horns at one end of the chamber towards the receiver. The horns are positioned by the X-Y Positioner system. One of the horns is stationary and the other is movable. The position of the movable horn is updated in one millisecond time increments from the output of a computer program that is run during the simulation. Even though the position of the stationary horn does not change during the simulation, its position can be adjusted to a desired value prior to the simulation. The directions the horns point at are controlled such that the center lines of the main antenna lobes radiated from the horns are always directed at the RF receiver. Two possible configurations to achieve this directivity are: (1) The rails on which the horns move are curvilinear with a radius of curvature such that the receiver is at the center of curvature, (2) The rails on which the horns move are straight linear and the squint angle (in azimuth and elevation) for the horns is dynamically adjusted to point the antennas at the receiver throughout the simulation (the stationary horn squint angles are adjusted once prior to the simulation whereas the squint angles of the movable horn are adjusted continuously during the simulation). Both horns can also rotate about their longitudinal (main antenna beam) axes. An in-line waveguide rotary joint will be used to connect a co-axial cable to the horn. In case 1, the movable horn has two degrees of translational freedom and one degree of axial rotational freedom which results in a total of three degrees of freedom. In case 2 the movable horn has two degrees of translational freedom, two degrees of squint rotational freedom and one degree of axial rotational freedom resulting in a total of five degrees of freedom. The fixed horn has the same degrees of freedom as the movable horn with the difference that the fixed horn has no motion during the simulation with its position adjusted prior to the simulation.

The controller of the X-Y Positioner system shall allow for two modes of operation: manual mode and external mode. In **manual mode**, the operator can select through a graphical user interface in the positioner controller system, desired X-Y positions for the movable horn which results in translation of the horn to the specified location. In manual mode a closed-loop simulation is not run and testing is done in a fixed X-Y configuration of the movable horn. In **external mode**, the position of the movable horn is controlled by external analog voltages (ranging between -10 volts and +10 volts) which are generated by an NRL-supplied simulation computer. Horn position is directly proportional to the external voltage. There are two analog voltage input channels in the vendor-supplied controller system for external voltages. The controller uses the external voltages to position the movable horn to the location dictated by the simulation program. The position of the stationary horn can be adjusted manually along vertical and horizontal axes by adjusting the stationary horn rail position along the vertical axis and the position of the stationery horn along the rail. The orientation of the horns towards the receiver is done independently by the controller (based on the position of the horns) using squint angle control or through the geometry of the track on which the horns move.

The horns to be used are standard gain horns with frequencies ranging from 4 to 40 GHz. The weight of the horns will not exceed 1 pound. A typical horn is assumed to be a pyramidal horn of length 6.5 inches and cross section of 4inches x 3 inches at the transmit end. These horn parameters can be used for calculation of moments of inertia.

Options

This acquisition has two options. Option 1 is for a curvilinear track and option 2 is for a straight linear track. Offerors shall break out the price for Options 1 and 2 separately.

Space Requirements

The anechoic chamber maximum dimensions are 12’ x 12’ x 35’. The available space for the X-Y positioner is 12’ x 12’ x 1’-5” as shown in Figure 1.1. The working area of the horns shall be at least 10’ x 10’ as shown in Figure 1.1 and is centered on the available space for the X-Y positioner. The location of the focal point of the horns is 26’-7” away from the center of the working area (marked “+”) and can be seen in Figure 1.1.

Design Configuration

Figure 1.2 shows the configuration of the X-Y Positioner using curvilinear tracks to enable the horns to be directed at the focal point (see figure 1.1) by virtue of the geometrical constraints imposed by the curvature of the tracks. The X-Y Positioner shall be mounted in the working area shown in figure 1.1. The lower rail in figure 1.2 is a rail that can be adjusted along the two supporting vertical members. Positioning of the horn involves moving the rail manually to the desired vertical position and moving the fixed horn to the desired horizontal position. However after adjustment the horn remains stationery during a simulation. The upper rail in figure 1.2 is a movable rail that is positioned along the y-axis. The movable horn is positioned along the rail in the x-axis. The X-Y position of the horn (through vertical rail position and horizontal horn position) is controlled by the positioner controller. In manual mode the movable horn position is selected by the user through a graphical user interface and the controller moves the rail to the selected vertical position and the movable horn to the desired horizontal position. In external mode the movable horn is positioned in response to commands from the simulation computer. The controller moves the horn such that its position closely tracks the commanded position.

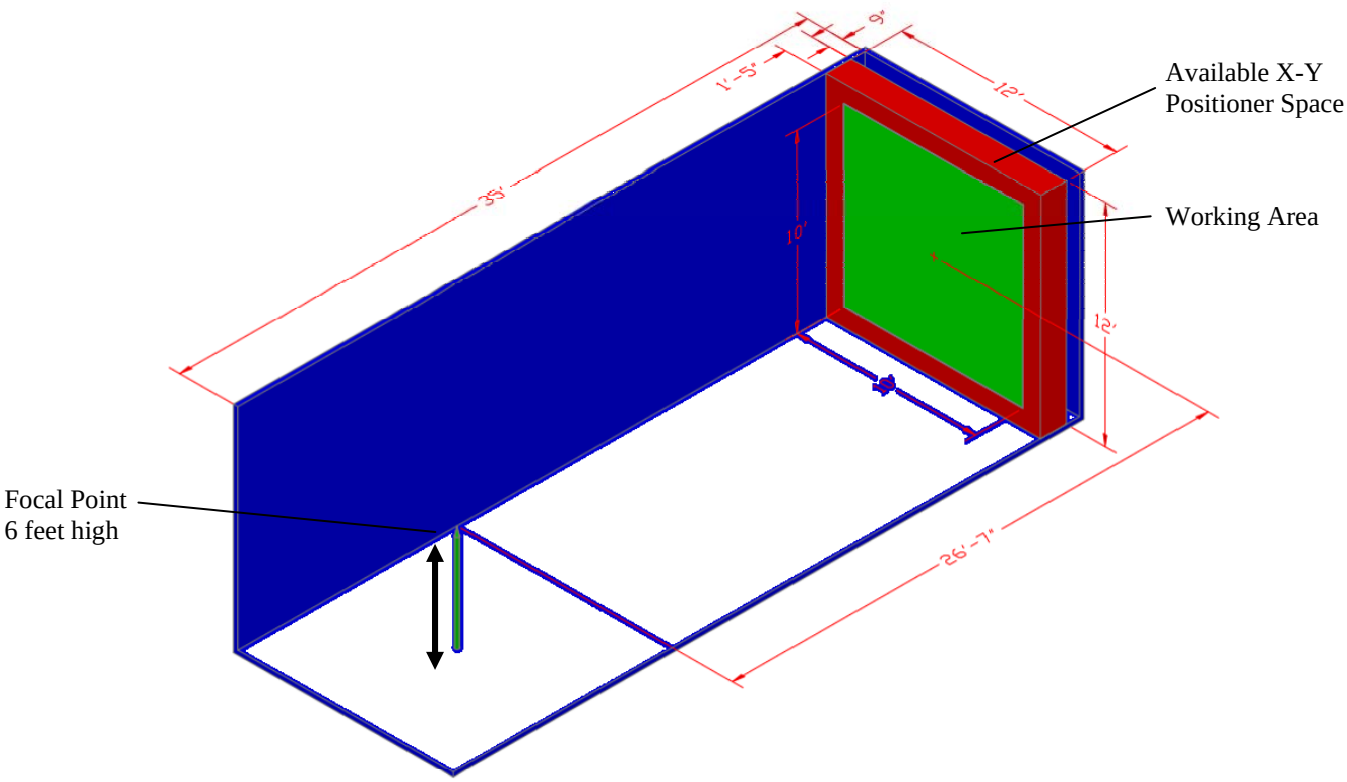

Figure 1.1: Anechoic Chamber and Working Area

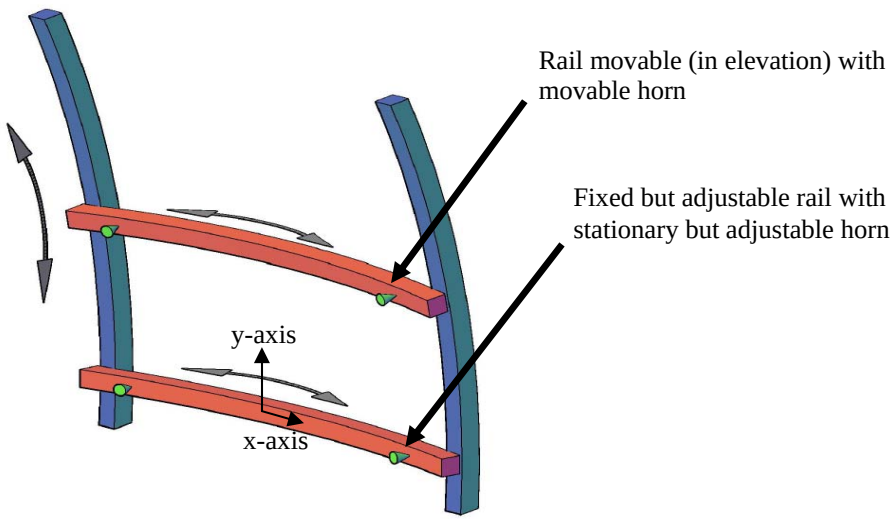

Figure 1.2: X-Y Positioner with curvilinear tracks

The movable rail supports the movable horn which can move along the rail. In manual mode the position of the movable horn is specified by the user through a graphical user interface. In external mode the movable horn position is specified by the simulation program, the position being updated at a frame time of one millisecond. The movable horn tracks the commanded position in a continuous manner. The combination of vertical motion (along Y-axis) of the movable rail and the horizontal position (along X-axis) of the movable horn along the rail allows the movable horn to be positioned at any commanded X-Y position within the working area of the chamber.

If straight linear tracks are used instead of curvilinear tracks, the positioner controller must adjust the squint angles of the both, the fixed and movable horns, so that the main antenna beam line-of-sight is always directed at the receiver.

Motion Requirements

The X-Y positioner must be able to produce motions of the movable horn similar to the profiles of Figure 2 through Figure 5. These figures are representative examples of the types of motion that will be run on this positioner. Decelerations at the end of the profiles may be performed outside of the 10’ x 10’ working area. The x-axis is the horizontal axis and the y-axis is the vertical axis. The line corresponding to zero position of the x-axis is the vertical line at the center of the working area. The line corresponding to zero position of the y-axis is the horizontal line at the center of the working area. Therefore the point x=0, y=0 is the center point of the working area shown in figure 1.1. In the external mode the position of the movable horn follows the commanded position generated by the simulation computer. The commanded position is provided as voltages to the positioner controller. The voltages are updated every millisecond. The working area of the positioner system is 10 ft x 10 ft. The positioner reaches the limits of the chamber when either the vertical or horizontal position from the center point of the area exceeds 60 inches.

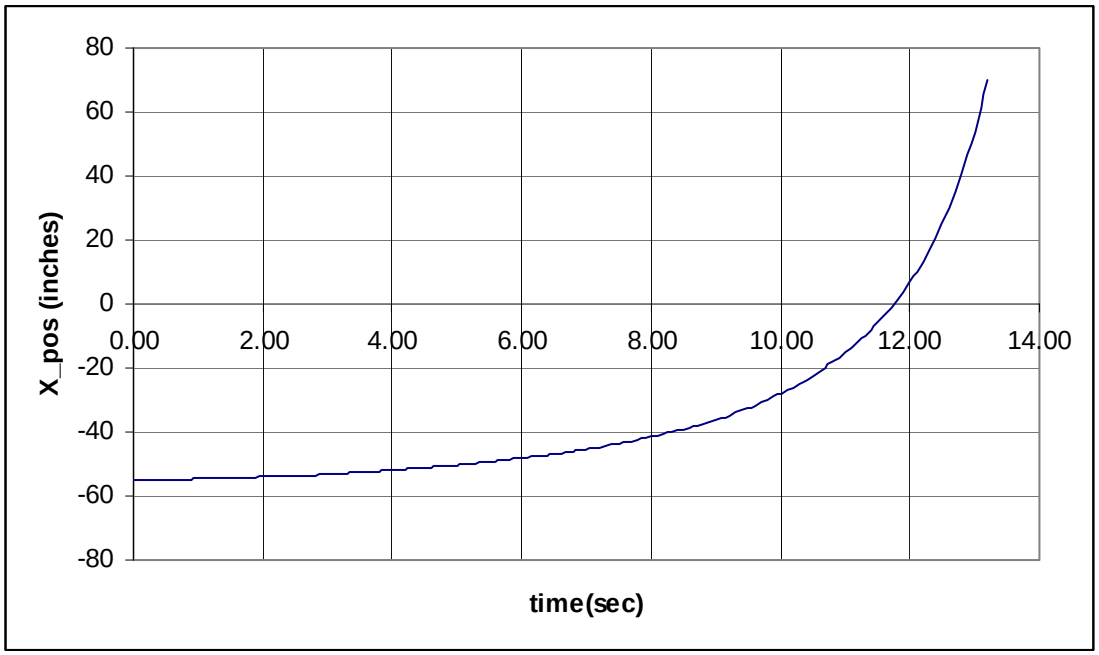

Figure 2: Azimuth vs. Time (Horizontal Position)

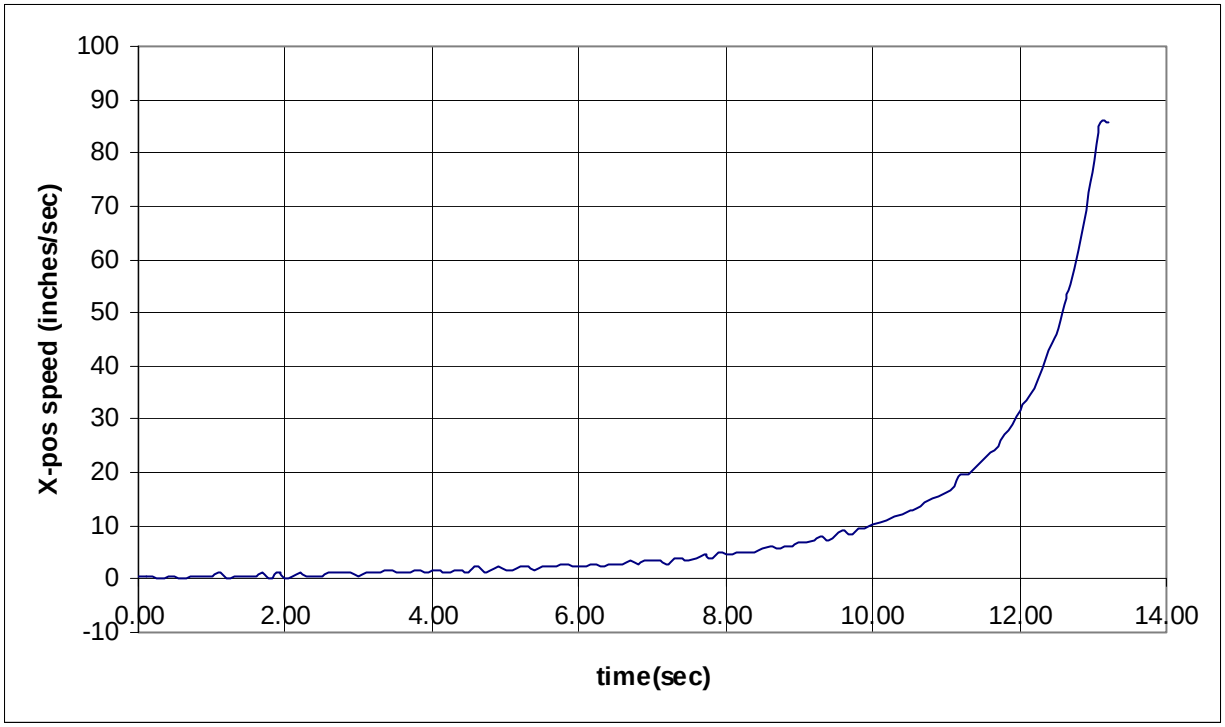

Figure 3: Azimuth Speed vs. Time (Horizontal Speed)

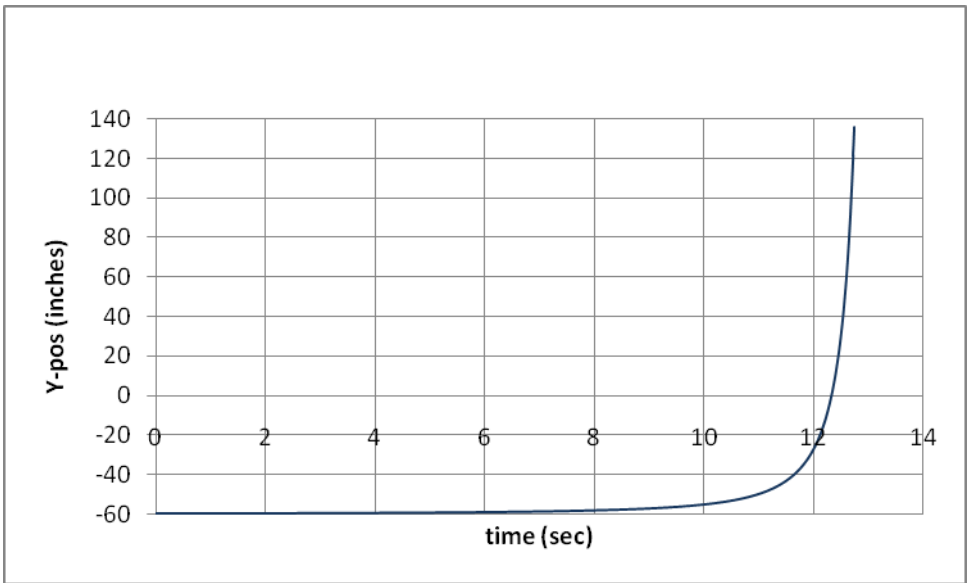

Figure 4: Elevation vs. Time (Vertical Position)

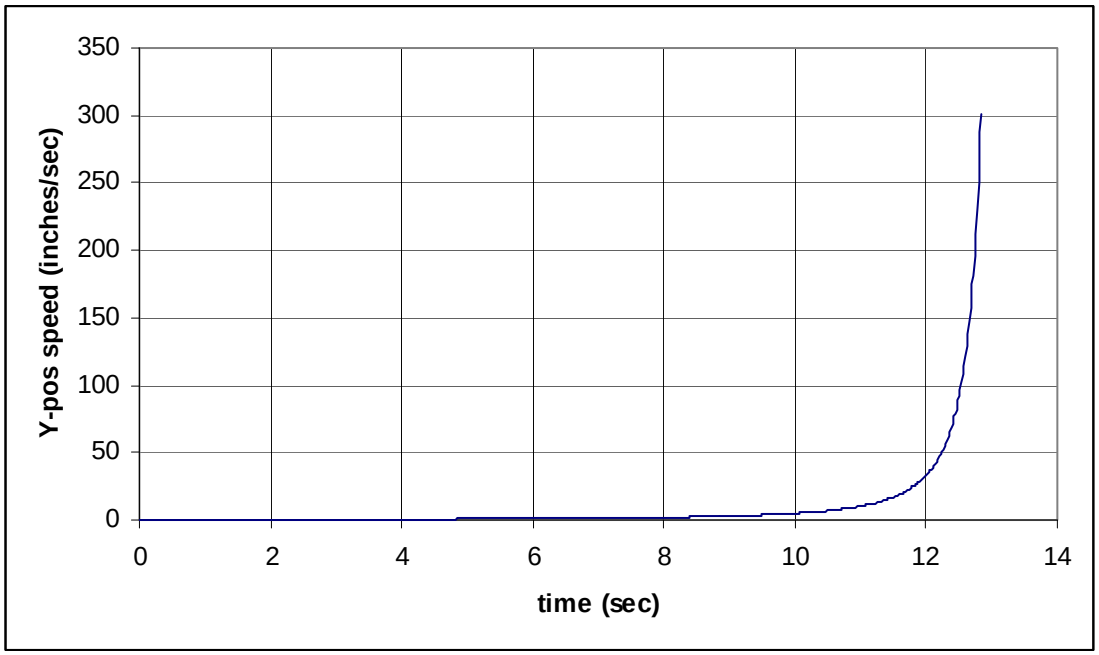

Figure 5: Elevation Speed vs. Time (Vertical Speed)

The general requirements of the system are specified according table 1.

Table 1: Specifications

X-Position	**Specification**
Positional accuracy (see note 1)	+/- 0.2”
Resolution	0.10”
Repeatability	+/- 0.1”
Maximum speed (at maximum load) (see note 2)	32 inches/sec
Maximum acceleration (at maximum load) (see note 3)	Must meet representative profiles of Figures 2 through 3 up to maximum speed
Maximum load (horn)	1.0 lb

Minimum travel area	10’ x 10’ working area according to Figure 1.1
Y-Position	
Positional accuracy (see note 4)	+/- 0.5”
Resolution	0.20
Repeatability	+/- 0.2”
Maximum speed (at maximum load) (see note 5)	24 inches/sec
Maximum acceleration (at maximum load) (see note 6)	Must meet representative profiles of Figures 4 through 5 up to maximum speed.
Maximum load (horn)	1.0 lb
Minimum travel area	10’ x 10’ working area according to Figure 1.1
Squint Azimuth and Squint Elevation	Specifications are with respect to receiver-horn line-of-sight
Angular accuracy	+/- 0.50 degrees
Resolution	0.10 degrees
Repeatability	+/- 0.1 degrees

Note 1: The positional accuracy for X-position is specified for motion up to maximum speed of 32 inches/sec. The segment of the plot in figure 2 where the speed exceeds the maximum specification can be ignored.

Note 2: The plot in figure 3 shows speed greater than the maximum speed of 32 inches/second. Note that the positioner is not required to go faster than 32 inches/sec and therefore the portion of the plot in figure 3 for which the speed exceeds 32 inches/second can be ignored.
Note 3: The acceleration specifications apply only to the regions of figures 2 and 3 for which the maximum speed is less than 32 inches/sec.

Note 4: The positional accuracy for Y-position is specified for motion up to maximum speed of 24 inches/sec. The segment of the plot in figure 4 where the speed exceeds the maximum specification can be ignored.

Note 5: The plot in figure 5 shows speed greater than the maximum speed of 24 inches/second. Note that the positioner is not required to go faster than 24 inches/sec and therefore the portion of the plot in figure 5 for which the speed exceeds 24 inches/second can be ignored.

Note 6: The acceleration specifications apply only to the regions of figures 4 and 5 for which the maximum speed is less than 24 inches/sec.

Control
The system will be operated by two different computers. In external mode, the simulation computer (NRL supplied) will provide the position profile of the movable horn. The motion will be defined by the simulation computer and will include profiles similar to figures 2 through 5. In manual mode, the controller computer (vendor supplied) will allow the user to specify the desired location of the movable horn. User interface software, provided by the vendor will operate on the controller computer. The user interface software shall function in a PC based Windows environment. During the external mode of operation, the controller shall be reactive to direct analog signals from a simulation computer. The voltages supplied by the simulation computer will be processed by the controller computer to position the movable horn at the commanded position. The simulation computer update rate (frame time) is one millisecond. However, the commanded position of the horn may be less than the resolution of the positioner. Therefore, a number of frames may elapse before the positioner responds to the simulation command. The data provided from the simulation computer (Systran DAC) for each horn will be two analog voltages for azimuth and elevation. The commanded voltage can range from -10V to +10V with resolution of 4.88 milli-volts and output current of 20 milli-amps. The positioner controller shall be rack-mounted in a standard 19” frame provided by the vendor.

Feedback
The system will provide two types of antenna horn position feedback; one for the simulation computer and one for the controller computer. The feedback for the simulation computer is a voltage that is proportional to the position of a horn so that a scaling factor can be determined to convert voltage to position. This analog voltage will be sent back to the simulation computer (via the positioner controller system) to allow for comparisons between commanded and achieved positions. The second type of feedback is an indication to the operator at the controller computer, in value or graphical format, of the position of the horns.

Safety

The motion of the system is controlled through the motors and their integral mechanical brakes. However, two fail safes shall be employed; electronic cutoff switches and mechanical hard stops (shock absorbers). The electronic cutoff switches will trigger when the system has passed outside of the designated safe operating zone (defined by the vendor), while the mechanical hard stops will cushion the system from damaging impacts outside of the same area. There will also be safety mechanisms to prevent impact between the movable rail and fixed rail.

Structure

The vendor shall be responsible for the mechanical integrity and installation of the system. The anechoic chamber is best operated with no metal or exposed metal. Therefore, metal is to be minimized within the chamber, when feasible. Structures and surfaces should be non-metallic or covered by absorber. The floor and ceiling rails should be below the level of anechoic chamber material.

Cable Management

The cabling design is very important to delivery of a successful operational system. EMI issues, appropriate connector selection, strain-relief, shielding, low leakage, repeated flexures, and cable routing shall all be considered. The RF cable selected might be similar to PN: UFB197C, an ultra-low loss cable from Micro-Coax; however, this cable is provided as a reference only and final selection is up to the vendor.

Power

The system shall run on 110VAC 60Hz or 208VAC, 60Hz, three phase power.

Documentation

Documentation generated by the vendor will be transferred to government ownership. The documentation shall include:

- Design drawings – electrical schematics, mechanical drawings, software diagrams, and parts list. Parts list to include component and manufacturer for future maintenance needs.
- Software – source code, test profiles
- Procedures – acceptance test, operating, and maintenance procedures

Software

Vendor shall provide the interface software which will run on the X-Y Positioner controller computer, to allow operation in external or manual modes. In manual mode, the vendor will provide software for positioning of the movable horn to a user specified position. The position will be specified in (X,Y) coordinates. In external mode, the software in the controller computer will position the movable horn to a position based on analog voltages provided by the user via the NRL simulation computer. The vendor software will provide the functionality defined in the “Feedback” section.

The software shall include features that will enhance the performance of the system:

- Startup diagnostics – ensure that the system moves, properly reports its position, and that all safety mechanisms are operational at each startup.
- Startup procedures – ensure the system is properly zeroed and calibrated at each startup. Calibration must ensure that accuracy is maintained over time.
- Software impact checks – examine position and velocity of the system and abort operation if outside of safe operating conditions. (Can be turned off at user’s discretion.)
- Motor shutoff – protect motors from exceeding their operating temperatures via thermal switches. (Can be turned off at user’s discretion.)

Delivery and Installation

The vendor will deliver the system to the Naval Research Laboratory (NRL) in Washington, D.C. and install it in the anechoic chamber. The existing hardware will be removed or reworked and used by the vendor.

The desired delivery of the system installed with all software and documentation is six (6) months from date of award.

Factory Acceptance Test

The vendor shall delivery an acceptance test plan with its proposal. The test plan shall provide detail of the criteria and procedures the vendor will use to test the entire system at NRL using NRL-specified horns, not to exceed one pound.

Equivalent dummy loads may also be acceptable after review by NRL. The vendor will demonstrate the system capabilities according to an acceptance test procedure (generated by the vendor and approved by NRL).

Warranty

The offeror shall provide its standard commercial warranty for this system.