REVDATE: FILE NAME: J:\09014.09\drawings\A40-Construction Docs 100%\09014.09-T1.dwg LAYOUT NAME: G-1 PLOTTED: Wednesday, July 07, 2010 - 11:36am

Copyright 2008 Marshall Craft Associates, Inc. All Rights Reserved

DEPARTMENT OF THE NAVY

RENOVATION OF BUILDING A69

NAVAL RESEARCH LABORATORY

WASHINGTON, DC

NAVFAC WASHINGTON

WASHINGTON, DC

VICINITY PLAN

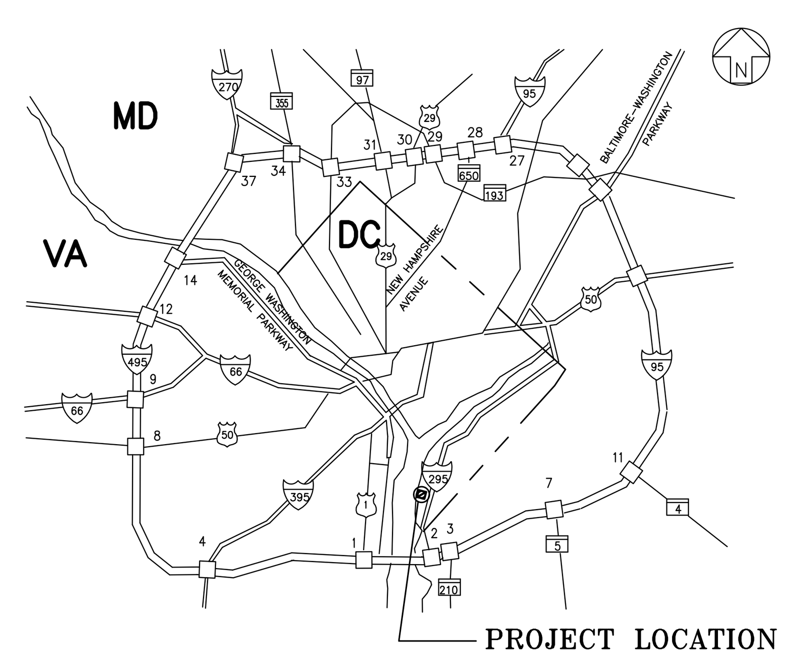

LOCATION MAP

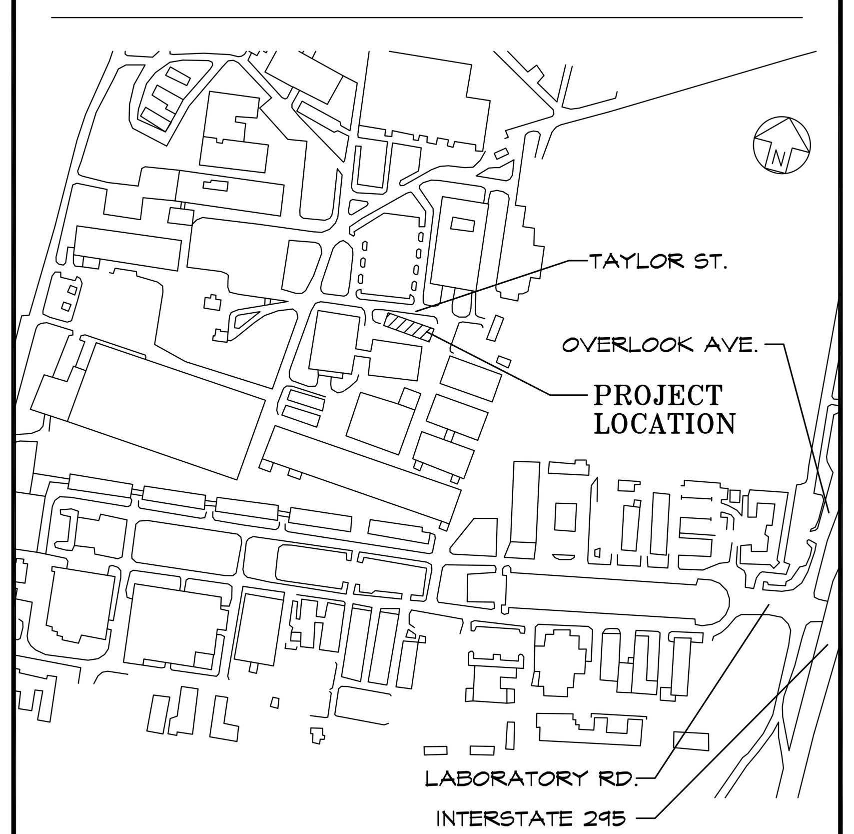

ARCHITECTURAL ABBREVIATIONS

SEE FINISH LEGEND FOR ADDITIONAL ABBREVIATIONS

AC	Acoustical	MACH	Machine
ACP	Acoustical CeilingPanel	MBH	Mop & Broom Holder
AFF	Above Finish Floor	MFR	Manufacturer
ADJ	Adjustable	MAS	Masonry
AHU	Air-handling unit	MAX	Maximum
ALUM	Aluminum	MECH	Mechanical
&	And	MEZZ	Mezzanine
@	At	MIN	Minimum
		MO	Masonry Opening
BLDG	Building	MISC	Miscellaneous
BUR	Built Up Roofing	MTL	Metal
℄	Center Line	NIC	Not In Contract
CB	Ceramic Base	NOM	Nominal
CLG	Ceiling	NTS	Not To Scale
CLR	Clear		
CMU	Concrete Masonry Unit	OC	On Center
COL	Column	OD	Outside Diameter
CONC	Concrete	OH	Overhead
CONT	Continuous	OPG	Opening
CJ	Control Joint	OPP	Opposite Hand
CPT	Carpet		
CORR	Corridor	PSF	Pounds Per Sq Foot
CONST	Construction	PTD	Painted
COORD	Coordinate	PT	Preservative Treated
		PL	Plate
D	Deep	PLAM	Plastic Laminate
DTL	Detail	PLYWD	Plywood
DF	Drinking Fountain	PTD	Paper Towel Dispenser
DIAG	Diagonal		
DN	Down	REINF	Reinforced
DS	Downspout	REQ'D	Required
DWG	Drawing	R	Riser
		RB	Rubber Base
EWC	Electric Water Cooler	RM	Room
EL	Elevation	RO	Rough Opening
ELEC	Electrical		
EQ	Equal	SECT	Section
EQUIP	Equipment	SIM	Similar
EXH	Exhaust	SPEC	Specification(s)
EXIST	Existing	SF	Square Feet
EXP	Expansion	SS	Stainless Steel
EXT	Exterior	STC	Sound Transmission Class
		STD	Standard
FE	Fire Extinguisher (w/ Bracket)	STL	Steel
FEC	FE Cabinet w/ FE	STN	Stain
FIN	Finish	SUSP	Suspended
FLR	Floor		
FD	Floor Drain	T	Tread
FRT	Fire Retardant Treated	TBD	To Be Determined
		TC	Top of Curb
GALV	Galvanized	TEL	Telephone
GA	Gauge	TOS	Top of Slab
GWB	Gypsum WallBoard	TOS	Top of Steel
		TTD	Toilet Tissue Dispenser
HB	Hose Bib	TYP	Typical
HT, HGT	Height		
HM	Hollow Metal	UL	Underwriters Laboratory
HORIZ	Horizontal	UON	Unless Otherwise Noted
HR	Hour		
H	High	VB	Vinyl Base
		VERT	Vertical
INSUL	Insulation	VIF	Verify in Field
INT	Interior	VCT	Vinyl Composition Tile
INV	Invert		
		WWF	Welded Wire Fabric
JAN	Janitor	W	Wide
JT	Joint	WF	Wide Flange
JST	Joist	w/	With
		WR	Water Resistant
		WD	Wood

ARCHITECTURAL MATERIALS & SYMBOLS

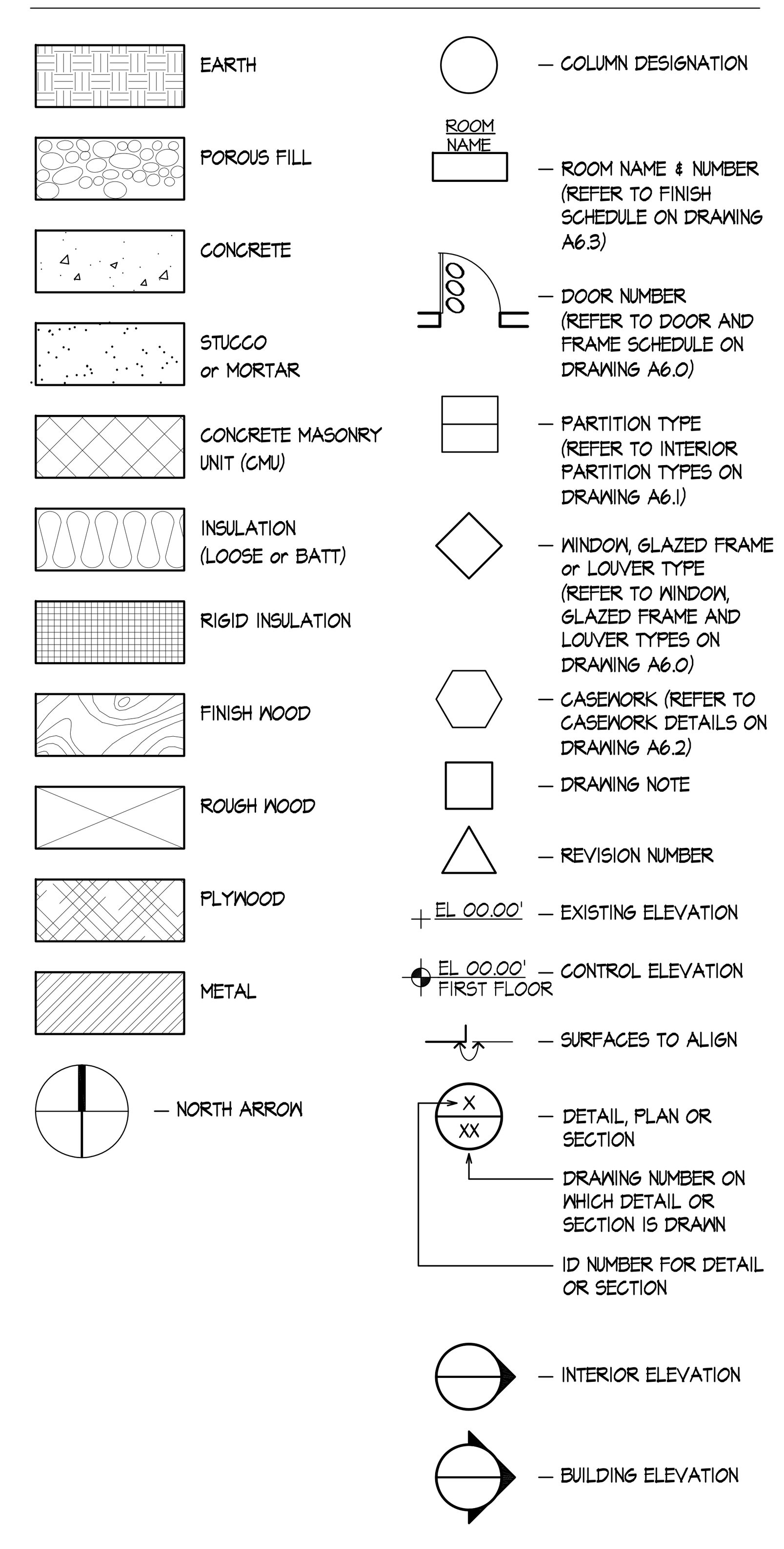

DRAWING INDEX

NAVFAC NO	SHEET NAME	
	GENERAL	
13022501	T1.0	COVER SHEET
13022502	T1.1	CODE COMPLIANCE PLAN & SUMMARY
	CIVIL	
13022503	CV1.0	TITLE SHEET
13022504	C1.0	EXISTING CONDITIONS/DEMOLITION PLAN
13022505	C2.0	LAYOUT, GRADING & STRIPING PLAN
13022506	C3.0	SITE DETAILS
13022507	C4.0	UTILITY PLAN
13022508	C5.0	SEDIMENT AND EROSION CONTROL PLAN
13022509	C5.1	SEDIMENT AND EROSION CONTROL NOTES
13022510	C5.2	SEDIMENT AND EROSION CONTROL DETAILS
	HAZARDOUS MATERIALS	
13022511	H1.0	HAZARDOUS MATERIALS REMOVAL PLAN
	ARCHITECTURAL	
13022512	A1.0	DEMOLITION NOTES
13022513	A1.1	DEMOLITION PLAN
13022514	A1.2	DEMOLITION ELEVATIONS
13022515	A1.3	DEMOLITION BUILDING SECTIONS
13022516	A2.0	FLOOR PLAN
13022517	A2.1	ROOF PLAN AND DETAILS
13022518	A2.2	REFLECTED CEILING PLAN
13022519	A3.0	BUILDING ELEVATIONS
13022520	A4.0	BUILDING SECTIONS
13022521	A5.0	WALL SECTIONS
13022522	A5.1	WALL SECTIONS
13022523	A5.2	DETAILS
13022524	A5.3	DETAILS
13022525	A5.4	DETAILS
13022526	A5.5	DETAILS
13022527	A5.6	ENLARGED PLANS, SECTIONS AND DETAILS
13022528	A5.7	ENLARGED STAIR PLANS SECTION AND DETAILS
13022529	A5.8	LADDER DETAILS & MECH PLATFORM PLAN
13022530	A6.0	DOOR AND WINDOW TYPES AND SCHEDULE
13022531	A6.1	DOOR FRAME DETAILS & PARTITION TYPES
13022532	A6.2	ARCHITECTURAL CASEWORK & TOILET PLAN
13022533	A6.3	FINISH SCHEDULE AND NOTES
	STRUCTURAL	
13022534	S1.0	FOUNDATION PLAN
13022535	S1.1	SECOND FLOOR & ROOF FRAMING PLAN
13022536	S2.0	SECTIONS & DETAILS
13022537	S2.1	SECTIONS & DETAILS
13022538	S2.2	SECTIONS & DETAILS
13022539	S2.3	SECTIONS & DETAILS
13022540	S3.0	GENERAL NOTES
	MECHANICAL	
13022541	M0.1	SYMBOLS AND ABBREVIATIONS
13022542	M0.2	SITE PLAN - MECHANICAL DEMOLITION
13022543	M0.3	SITE PLAN - MECHANICAL
13022544	M0.4	SITE PART PLANS AND DETAILS
13022545	M0.5	SITE PART PLANS AND DETAILS
13022546	M1.1	DEMOLITION PLAN - MECHANICAL
13022547	M2.1	FIRST FLOOR PLAN - MECHANICAL
13022548	M2.2	FIRST FLOOR PLAN - MECHANICAL PIPING
13022549	M2.3	ROOF PLAN - MECHANICAL
13022550	M3.1	SECTIONS - MECHANICAL
13022551	M3.2	SECTIONS - MECHANICAL
13022552	M3.3	SECTIONS - MECHANICAL
13022553	M4.1	PART PLAN - MECHANICAL ROOM
13022554	M4.2	PART PLAN - MECHANICAL ROOM
13022555	M4.3	PART PLAN - MECHANICAL ROOM
13022556	M4.4	PART PLANS - MECHANICAL ROOM
13022557	M5.1	DETAILS AND DIAGRAMS
13022558	M5.2	DETAILS AND DIAGRAMS
13022559	M5.3	DETAILS AND DIAGRAMS
13022560	M5.4	DETAILS AND DIAGRAMS
13022561	M5.5	DETAILS AND DIAGRAMS
13022562	M5.6	DETAILS AND DIAGRAMS
13022563	M6.1	MECHANICAL SCHEDULES
13022564	M6.2	MECHANICAL SCHEDULES
13022565	M6.3	MECHANICAL SCHEDULES
13022566	M6.4	MECHANICAL SCHEDULES
13022567	M7.1	AUTOMATIC TEMPERATURE CONTROLS
13022568	M7.2	AUTOMATIC TEMPERATURE CONTROLS
13022569	M7.3	AUTOMATIC TEMPERATURE CONTROLS
13022570	M7.4	AUTOMATIC TEMPERATURE CONTROLS
	PLUMBING	
13022571	P2.1	FIRST FLOOR PLAN - PLUMBING
13022572	P3.1	DETAILS, DIAGRAMS, AND SCHEDULES
13022573	P3.2	DETAILS AND DIAGRAMS
	ELECTRICAL	
13022574	E0.1	PART SITE PLAN, SYMBOLS LIST AND ABBREVIATIONS
13022575	E1.1	DEMOLITION PLAN - ELECTRICAL
13022576	E2.1	FIRST FLOOR PLAN - LIGHTING
13022577	E2.2	FIRST FLOOR PLAN - POWER AND SYSTEMS
13022578	E2.3	ROOF PLAN - ELECTRICAL
13022579	E2.4	UTILITIES AND GROUNDING
13022580	E4.1	PART PLANS - MECH ROOM AND UPPER FLOOR
13022581	E5.1	DETAILS
13022582	E5.2	DETAILS
13022583	E5.3	DETAILS
13022584	E5.4	DIAGRAMS
13022585	E5.5	LIGHTING FIXTURES
13022586	E5.6	LIGHTING FIXTURES
13022587	E6.1	SCHEDULES
13022588	E6.2	SCHEDULES
	FIRE PROTECTION AND FIRE ALARM	
13022589	FP1.0	FIRE PROTECTION LEGEND, NOTES & DETAILS
13022590	FP2.0	FLOOR PLANS - FIRE PROTECTION
13022591	FP6.0	FIRE PROTECTION SECTIONS & DETAILS
13022592	FA1.0	FIRE ALARM LEGEND, NOTES & DETAILS
13022593	FA2.0	FLOOR PLANS - FIRE ALARM

MARSHALL CRAFT ASSOCIATES®

Marshall Craft Associates, Inc.
Architecture / Interior Design / Planning
6112 York Road, Baltimore, Maryland 21212-2611
410.532.3131 Fax: 410.532.9206

MECHANICAL / ELECTRICAL ENGINEERS
JAMES POSEY ASSOCIATES, INC.
3112 LORD BALTIMORE DRIVE
BALTIMORE, MARYLAND 21244
(410) 265-6100

STRUCTURAL / CIVIL ENGINEERS
WHITNEY, BAILEY, COX AND MAGNANI, LLC
849 FAIRMOUNT AVENUE, SUITE 100
BALTIMORE, MD 21286
(410) 512-4500

FIRE PROTECTION ENGINEERS
EBL ENGINEERS, LLC
8005 HARFORD ROAD
BALTIMORE, MD 21234-5701
(410) 668-8000

GEOTECHNICAL ENGINEERS
SCHNABEL ENGINEERING, LLC
1504 WOODLAWN DRIVE
BALTIMORE, MD 21207
(410) 944-6170

ENVIRONMENTAL ENGINEERS
ARIA ENVIRONMENTAL, INC
5340B ENTERPRISE STREET
ELDERSBURG, MD 21784
(410) 549-5774

VIBRATION ENGINEER
POLYSONICS CORPORATION
5115 MACARTHUR BOULEVARD
WASHINGTON, DC 20016
(202) 244-7171

MCA JOB NO: 09014.09
DATE: 07/09/10
VERSION: FINAL SUBMISSION

JOB NAME: RENOVATION OF BUILDING A69
SHEET NO: T1.0

SYM	DESCRIPTION	DATE	APPR

MARSHALL CRAFT ASSOCIATES
Marshall Craft Associates, Inc.
Architecture / Interior Design / Planning
6112 York Road, Baltimore, Maryland 21212-2611
410.532.3131 Fax: 410.532.9206

AE LOGO

DES | DRW
REVIEWED BY
PM/DM
CHIEF ENG/ARCH
SEAL

DEPARTMENT OF THE NAVY — NAVFAC
NAVAL FACILITIES ENGINEERING COMMAND
ROICC — WASHINGTON NAVY YARD, WASHINGTON D.C.
NAVAL RESEARCH LABORATORY — DISTRICT OF COLUMBIA
RENOVATION OF BUILDING A69
WASHINGTON, D.C.
COVER SHEET

CODE ID. NO.	80091
SIZE	D
SCALE:	NO_SCALE
MAXIMO NO.	JPXMY
STA. PROJ. NO.	855305
WORK ORDER NO.	0010
CONSTR. CONTR. NO.	
NAVFAC DRAWING NO.	13022501
SHEET	1 OF 93

T1.0

DRAWFORM REVISION: 01 MAY 2006

LEGEND:

- 300' — DISTANCE TO POINT OF EGRESS
- 100' — COMMON PATH OF TRAVEL
- ACCESSIBLE BUILDING EXIT
- FEC — FIRE EXTINGUISHER AND CABINET
- FE — FIRE EXTINGUISHER

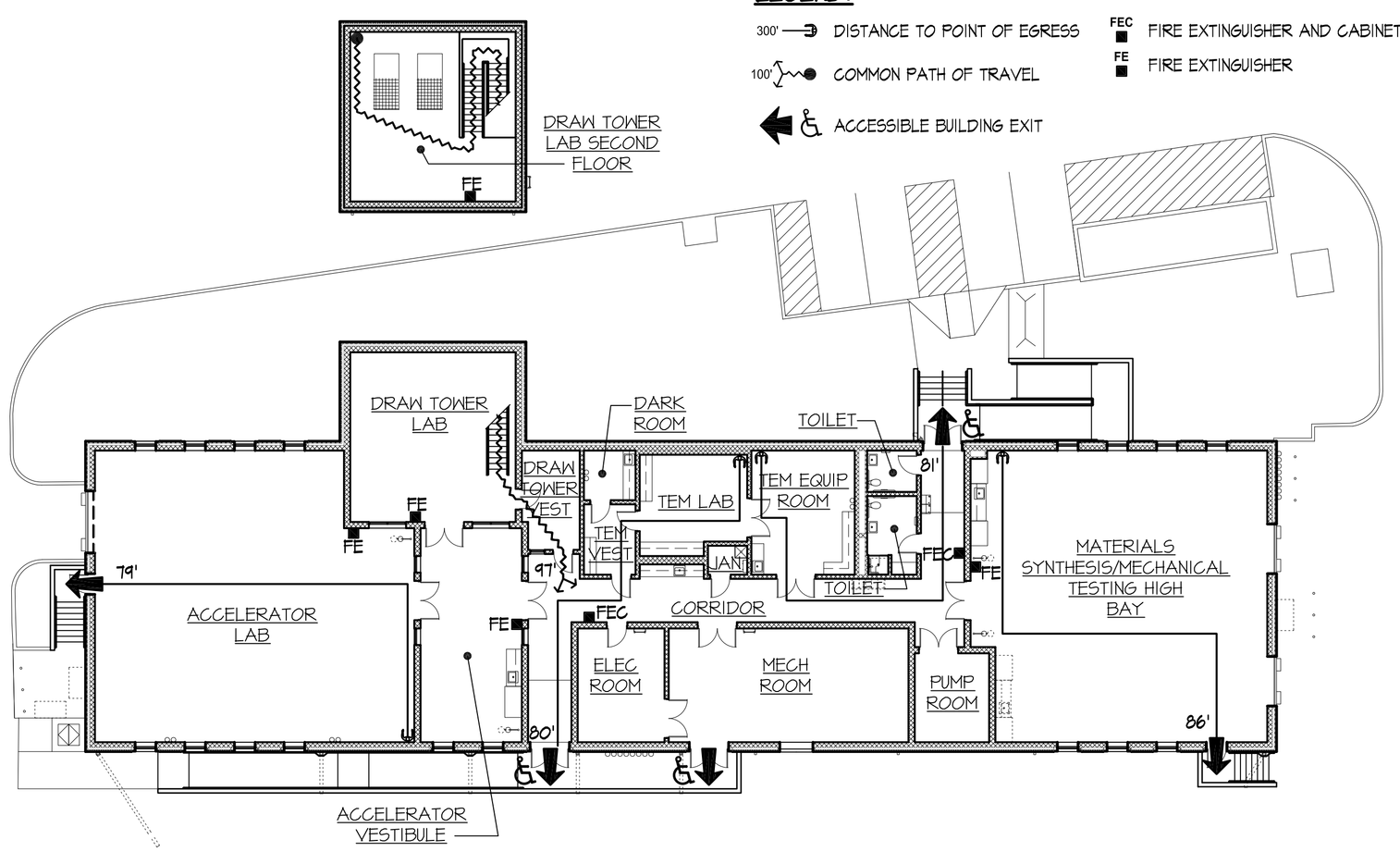

1 / T1.1 **CODE COMPLIANCE FLOOR PLAN**
SCALE: 1/16" = 1'-0"

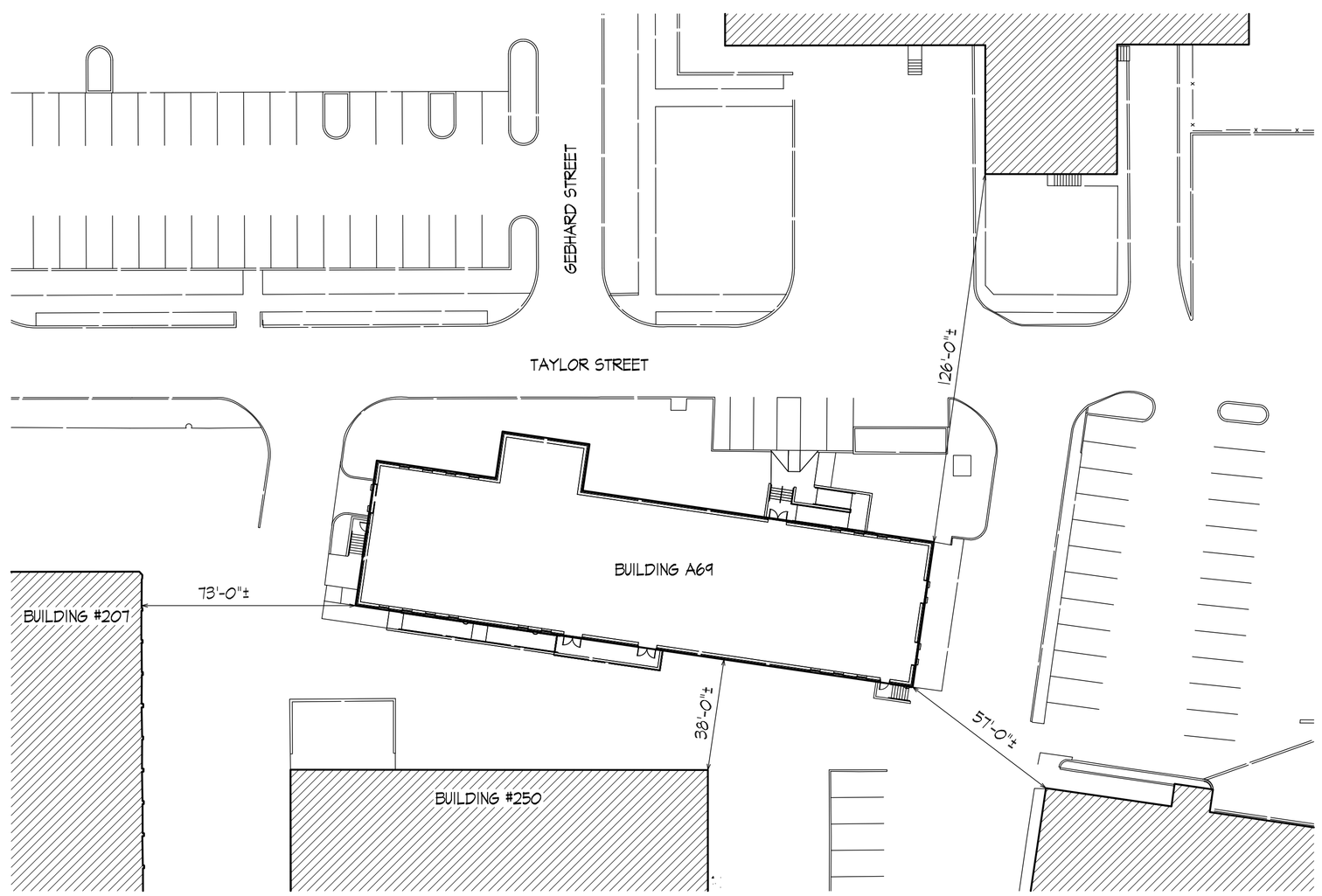

2 / T1.1 **CODE COMPLIANCE SITE PLAN**
SCALE: 1/32" = 1'-0"

CODE COMPLIANCE SUMMARY

APPLICABLE CODES & REGULATIONS

UNIFIED FACILITIES CRITERIA (UFC)
- UFC 1-200-01 - GENERAL BUILDING REQUIREMENTS
- UFC 3-600-01 - FIRE PROTECTION ENGINEERING FOR FACILITIES
- UFC 3-600-10N - FIRE PROTECTION ENGINEERING
- UFC 3-410-01FA - DESIGN: HEATING, VENTILATION, & AIR CONDITIONING
- UFC 4-021-01 - DESIGN O&M: MASS NOTIFICATION SYSTEMS
- UFC 4-010-01 - DOD MINIMUM ANTITERRORISM STANDARDS FOR BUILDINGS

INTERNATIONAL BUILDING CODE (IBC) - 2006
NFPA 10 STANDARD FOR PORTABLE FIRE EXTINGUISHERS
NFPA 13 STANDARD FOR THE INSTALLATION OF SPRINKLER SYSTEMS
NFPA 14 STANDARD FOR THE INSTALLATION OF STANDPIPE AND HOSE SYSTEMS
NFPA 30 FLAMMABLE AND COMBUSTIBLE LIQUIDS CODE
NFPA 45 STANDARD ON FIRE PROTECTION FOR LABORATORIES USING CHEMICALS
NFPA 55 COMPRESSED GASES AND CRYOGENIC FLUIDS CODE
NFPA 70 NATIONAL ELECTRICAL CODE
NFPA 72 NATIONAL FIRE ALARM AND SIGNALING CODE
NFPA 90A STANDARD FOR THE INSTALLATION OF AIR-CONDITIONING AND VENTILATING SYSTEMS
NFPA 101 LIFE SAFETY CODE - 2009
NFPA 110 STANDARD FOR EMERGENCY AND STANDBY POWER SYSTEMS
UFAS UNIFORM FEDERAL ACCESSIBILITY STANDARDS
ADAAG AMERICANS WITH DISABILITIES ACT ACCESSIBILITY GUIDELINES
ABA ARCHITECTURAL BARRIERS ACT

MINIMUM ANTITERRORISM STANDARDS

NOTE: THE NRL AT/FP OFFICER HAS DETERMINED THAT THE BUILDING WILL BE CONSIDERED A "LOW OCCUPANCY BUILDING", AND THEREFORE THERE IS NO REQUIREMENT FOR ANY STANDOFF DISTANCE AND BLAST-RATED WINDOWS ARE NOT REQUIRED.

SPECIAL HAZARDS

THE BUILDING IS DEFINED AS "LABORATORIES: TESTING AND RESEARCH" (GROUP B) PER IBC 304.1. THE BUILDING IS CONSIDERED A LABORATORY BUILDING PER NFPA 45 (2004). THE BUILDING IS CLASSIFIED AS A CLASS C LABORATORY UNIT PER NFPA 45 4.2.1.1. CLASS C LABORATORY UNITS ARE CONSIDERED INDUSTRIAL OCCUPANCIES (NFPA 101 CHAPTER 40) PER NFPA 45 5.3.1. NO FIRE SEPARATIONS ARE REQUIRED PER NFPA 45 TABLE 5.1.1. EGRESS FROM LABORATORY WORK UNITS HAS BEEN DESIGNED PER NFPA 45 5.4.1(3) AND NFPA 101. CHEMICALS IN LABORATORIES AND OUTSIDE OF LABORATORIES SHALL COMPLY WITH NFPA 45 TABLE 10.1.1, IBC 307.1(1), IBC 307.1(5), NFPA 30, AND NFPA 55. FUME HOODS AND VENTILATION SYSTEMS SHALL COMPLY WITH NFPA 45 CHAPTER 8 AND THE IMC.

USE AND OCCUPANCY CLASSIFICATION

IBC	NFPA 101 / NFPA 45
BUSINESS GROUP B	INDUSTRIAL

NOTE: THE CONSTRUCTION OF THE BUILDING IS 100% RENOVATION, THEREFORE PER UFC 3-600-01 THIS OCCUPANCY IS CONSIDERED "NEW" FOR THE PURPOSES OF EGRESS AND NFPA 101.

CONSTRUCTION TYPE

IBC	NFPA 101
TYPE IIB, NONCOMBUSTIBLE/UNPROTECTED	TYPE II (000)

GENERAL BUILDING LIMITATIONS

ALLOWABLE HEIGHT AND BUILDING AREA (IBC TABLE 503)
GROUP B: 23,000 SF PER STORY, 4 STORIES, 55 FT HEIGHT
ACTUAL BUILDING AREA:
GROUP B: FIRST FLOOR 10,080 SF
SECOND FLOOR 920 SF

NOTE: THE ACTUAL AREA IS LESS THAN THE ALLOWABLE AREA AND THEREFORE AN AREA MODIFICATION IS NOT NECESSARY IN ORDER TO COMPLY WITH THE BUILDING CODE.

ACTUAL BUILDING HEIGHT: 2 STORIES, 41' HEIGHT

FIRE RATED CONSTRUCTION

IBC 2006 (TABLE 601) AND NFPA 101 2009 (TABLE A.8.2.1.2)	
STRUCTURAL FRAME	0 HOURS
EXTERIOR BEARING WALLS	0 HOURS
INTERIOR BEARING WALLS	0 HOURS
EXTERIOR NONBEARING WALLS	0 HOURS
INTERIOR NONBEARING WALLS	0 HOURS
COLUMNS	0 HOURS
FLOOR/CEILING CONSTRUCTION	0 HOURS
ROOF/CEILING CONSTRUCTION	0 HOURS

FIRE RESISTIVE ASSEMBLIES

THE FOLLOWING FIRE RESISTANT ASSEMBLIES SHALL BE IN EFFECT THROUGHOUT THE ENTIRE PROJECT. SEE PARTITION TYPES SCHEDULE.
1. EXTERIOR WALLS BASED ON FIRE SEPARATION DISTANCE: 0 HOURS SINCE SEPARATION DISTANCE ≥ 10' (IBC TABLE 602).
2. MAXIMUM AREA OF EXTERIOR WALL OPENINGS: NO LIMIT (IBC TABLE 704.8).
3. CORRIDORS: 0 HOURS (IBC TABLE 1017.1 AND NFPA 101 7.1.3.1(2).
4. STORAGE ROOMS OVER 100 SF: 0 HOURS SINCE SPRINKLERED, SMOKE-RESISTANT CONSTRUCTION (IBC TABLE 508.2 AND NFPA 101 8.7.1.1(2).

FIRE SUPPRESSION SYSTEM

THE ENTIRE BUILDING WILL BE FULLY SPRINKLERED IN ACCORDANCE WITH NFPA 13.

FIRE ALARM SYSTEM

THE BUILDING WILL BE EQUIPPED WITH AN INTEGRATED FIRE ALARM AND MASS NOTIFICATION SYSTEM IN ACCORDANCE WITH NFPA 72.

PORTABLE FIRE EXTINGUISHERS

NFPA 10 TABLE 6.2.1.1
ORDINARY HAZARD OCCUPANCY:
CLASS A HAZARDS: 1,500 SF PER UNIT OF A, WITH 75' MAX TRAVEL DISTANCE
10,080 SF FIRST FLOOR REQUIRES: 7 UNITS OF A
920 SF SECOND FLOOR REQUIRES: 1 UNIT OF A
CLASS B HAZARDS: 20-B EXTINGUISHER RATING WITH 50' MAX TRAVEL DISTANCE

ALL FIRE EXTINGUISHERS ARE 4A-60B:C, 10 LB EXTINGUISHERS; THEREFORE BY AREA 2 FIRE EXTINGUISHERS ARE REQUIRED
7 FIRE EXTINGUISHERS ARE PROVIDED DUE TO TRAVEL DISTANCE

OCCUPANT LOAD

OCCUPANT LOAD FACTOR PER FUNCTION OF SPACE, (IBC TABLE 1004.1.1, AND NFPA TABLE 7.3.1.2)	BUSINESS AREAS: 100 GSF / PERSON INDUSTRIAL: 100 GSF / PERSON
TOTAL OCCUPANT LOAD	TOTAL FIRST FLOOR: 101 PERSONS TOTAL SECOND FLOOR: 10 PERSONS BUILDING OCCUPANT LOAD: 111 PERSONS TOTAL

NOTE: NRL HAS DETERMINED THAT THIS BUILDING IS TO BE DESIGNED FOR A MAXIMUM OCCUPANT LOAD OF 12 PERSONS.

EGRESS

	REQUIRED PER NFPA 101 2009	PROVIDED
EGRESS WIDTH PER OCCUPANT SERVED (NFPA 101 40.1.7 AND TABLE 7.3.3.1)		
STAIRWAYS	0.3" / PERSON	>0.3" / PERSON
OTHER EGRESS COMPONENTS	0.2" / PERSON	> 0.2" / PERSON
MAXIMUM LENGTH OF EXIT ACCESS TRAVEL DISTANCE FROM ANY POINT	250' (NFPA 101 40.2.6 AND TABLE A.7.6)	< 250'
MAXIMUM LENGTH OF COMMON PATH OF EGRESS TRAVEL	100' (NFPA 101 40.2.5 AND TABLE A.7.6)	< 100'
MAXIMUM LENGTH OF DEAD END IN CORRIDORS	50' (NFPA 101 40.2.5 AND TABLE A.7.6)	< 50'
MINIMUM NUMBER OF EXITS	NO LESS THAN 2 (NFPA 101 40.2.4 AND 7.4.1.1(1))	> 2
MINIMUM CORRIDOR WIDTH	36" MIN (NFPA 101 40.2.3.1 AND 7.3.4.1(2))	7'-0"
MINIMUM TYPICAL EGRESS DOOR WIDTH	32" CLEAR (NFPA 101 40.2.2.2.1 AND 7.2.1.2.3.2)	36" DOOR (33" CLEAR)
MINIMUM STAIR WIDTH	36", SERVING < 50 PERSONS (NFPA 101 40.2.2.3.1 AND 7.2.2.2.1.2(A))	> 36"
ACCESSIBLE ENTRANCES	AT LEAST 50% OF ALL PUBLIC ENTRANCES (PER ADAAG)	100%

PLUMBING FIXTURE COUNT

UFC 3-420-01 & 2009 INTERNATIONAL PLUMBING CODE (IPC)
PLUMBING OCCUPANT LOAD BASED ON A 12 PERSON OCCUPANT LOAD.

PLUMBING OCCUPANT LOAD = 12 PERSONS

BUILDING OCCUPANCY CLASSIFICATION: BUSINESS (UFC 3-420-01 TABLE 403.1)

	NUMBER OF PLUMBING FIXTURES	
	REQUIRED	PROVIDED
WATER CLOSETS	1	2
URINALS	0	0
LAVATORIES	1	2
DRINKING FOUNTAINS:	1	2
SHOWERS:	0	1
SERVICE SINK:	1	1

INTERIOR FINISHES

INTERIOR WALL AND CEILING FINISH	IBC 2006 (TABLE 803.5 AND 804.4.1)	NFPA 101 2009 (40.3.3 AND TABLE A.10.2.2)
CORRIDORS AND LOBBIES	CLASS C	CLASS A OR B
ROOMS AND ENCLOSED SPACES	CLASS C	CLASS A, B, OR C
INTERIOR FLOOR FINISH	CLASS II	CLASS I OR II

0 8' 16' 32' 64' 96'
SCALE: 1/32" = 1'-0"

0 4' 8' 16' 32' 48'
SCALE: 1/16" = 1'-0"

07/09/10

CAUTION: IF SHEET IS LESS THAN 36" X 24" USE GRAPHIC SCALE

SYM	DESCRIPTION	DATE	APPR.

NAVFAC

MARSHALL CRAFT ASSOCIATES
Architecture / Interior Design / Planning
6112 York Road, Baltimore, Maryland 21212-2611
410.532.3131 Fax: 410.532.3206

AE LOGO

SEAL

DES | DRW
REVIEWED BY
PM/DM
CHIEF ENG/ARCH

DEPARTMENT OF THE NAVY — NAVFAC
NAVAL FACILITIES ENGINEERING COMMAND — WASHINGTON NAVY YARD, WASHINGTON D.C.
ROICC: NAVAL RESEARCH LABORATORY — DISTRICT OF COLUMBIA
RENOVATION OF BUILDING A69
WASHINGTON, D.C.
CODE COMPLIANCE PLAN & SUMMARY

CODE ID. NO. 80091	SIZE D
SCALE:	AS_SHOWN
MAXIMO NO.	JPXMY
STA. PROJ. NO.	855305
WORK ORDER NO.	0010
CONSTR. CONTR. NO.	
NAVFAC DRAWING NO.	13022502
SHEET	2 OF 93

T1.1

DRAWFORM REVISION: 01 MAY 2006

REVDATE: FILE NAME: J:\09014.09\drawings\A40-Construction Docs 100%\T1.1.dwg LAYOUT NAME: A2.0 PLOTTED: Wednesday, July 07, 2010 - 11:37am

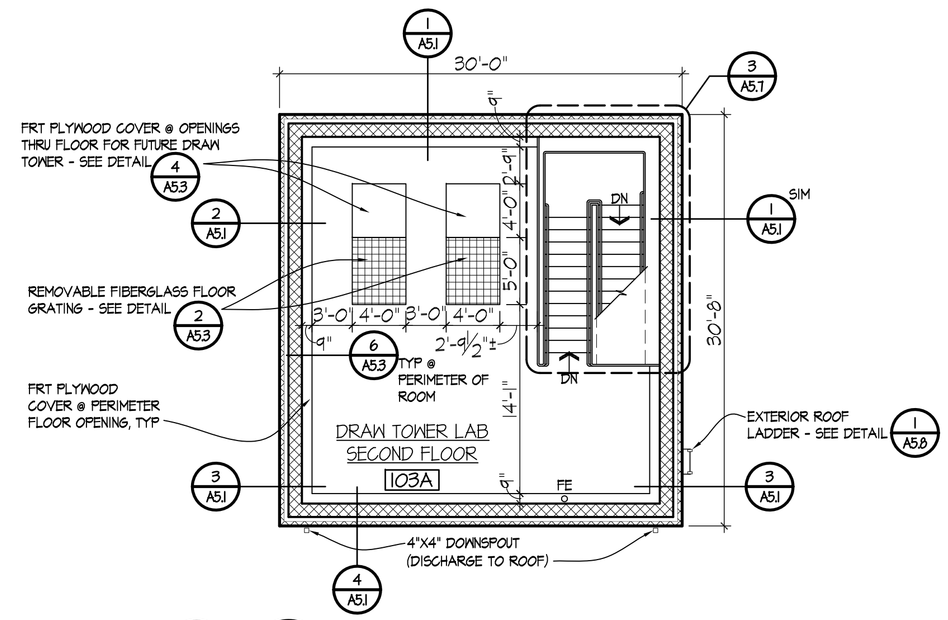

SECOND FLOOR PLAN

SCALE: 1/8" = 1'-0"

LEGEND:

- NEW DOOR
- NEW PARTITION
- SURFACES TO ALIGN

BID OPTIONS NOTE:

IN ADDITION TO THE BASE BID, THE FOLLOWING BID OPTIONS ARE ASSOCIATED WITH THIS PROJECT:

BID OPTION #1: PROVIDE REMOVABLE WALL CONSTRUCTION AT THE INTERIOR SIDE OF THE OVERHEAD DOOR OPENING IN THE ACCELERATOR LAB.

BID OPTION #2: PROVIDE BIKE RACK, SHOWER, AND BENCH.

BID OPTION #3: PROVIDE 2 EXTERIOR WINDOWS IN THE ACCELERATOR VESTIBULE.

BID OPTION #4: PROVIDE ELECTRICALLY OPERATED LIGHT-REDUCING AND LIGHT-BLOCKING WINDOW SHADES AT ALL EXTERIOR WINDOWS.

BID OPTION #5: PROVIDE A VEGETATIVE ROOF AND INCREASE THE SIZE OF THE ROOF STRUCTURE TO SUPPORT THE VEGETATIVE ROOF.

BID OPTION #6: PROVIDE PHOTOVOLTAIC SOLAR PANELS ON THE ROOF AND INCREASE THE SIZE OF THE ROOF STRUCTURE TO SUPPORT THE SOLAR PANELS.

BID OPTION #7: PROVIDE INCREASED THICKNESS OF ROOF AND EXTERIOR WALL INSULATION.

BID OPTION #8: PROVIDE ELEVATED METAL GRATING IN THE MECHANICAL ROOM AND PROVIDE ASSOCIATED ACCESS LADDER AND RAILING.

BID OPTION #9: PROVIDE MECHANICAL UNIT AHU-2 (TO SERVE THE DRAW TOWER LAB).

GENERAL CONSTRUCTION NOTES:

1. CHECK AND VERIFY ALL DIMENSIONS AND CONDITIONS AT THE JOB SITE BEFORE STARTING THE WORK. NOTIFY THE ARCHITECT OF ANY DISCREPANCIES OR POTENTIAL CONFLICTS BEFORE PROCEEDING WITH THE WORK.
2. DIMENSIONS ARE FROM FACE OF EXPOSED MASONRY UNLESS OTHERWISE NOTED.
3. THOSE DIMENSIONS WHICH REQUIRE FIELD VERIFICATION ARE IDENTIFIED WITH ±. DIMENSIONS NOT SO NOTED ARE INTENDED TO BE HELD. FIELD VERIFY ALL DIMENSIONS PRIOR TO FABRICATION OR INSTALLATION OF BUILDING COMPONENTS.
4. IN THE EVENT OF ANY DISCREPANCIES BETWEEN VARIOUS DRAWINGS OBTAIN CLARIFICATION FROM THE ARCHITECT BEFORE PROCEEDING WITH THE WORK.
5. WHERE SPECIFIC DETAILING IS NOT SHOWN, EXECUTE THE CONSTRUCTION IN A SOUND, WORKMANLIKE MANNER CONSISTENT WITH THE OTHER DETAILING SHOWN.
6. ROOM NAMES AND NUMBERS INDICATED ON DRAWINGS ARE FOR CONSTRUCTION PURPOSES ONLY. CLARIFY PERMANENT ROOM IDENTIFICATION WITH THE OWNER. PROVIDE A WALL MOUNTED ROOM IDENTIFICATION SIGN ADJACENT TO EACH INTERIOR DOOR. EACH ROOM IDENTIFICATION SIGN SHALL IDENTIFY THE ROOM NAME AND NUMBER AND SHALL INCLUDE RAISED LETTERS AND NUMBERS, AS WELL AS BRAILLE. ALSO THE SYMBOL OF ACCESSIBILITY SHALL BE INCLUDED ON SIGNS AT TOILET ROOMS.

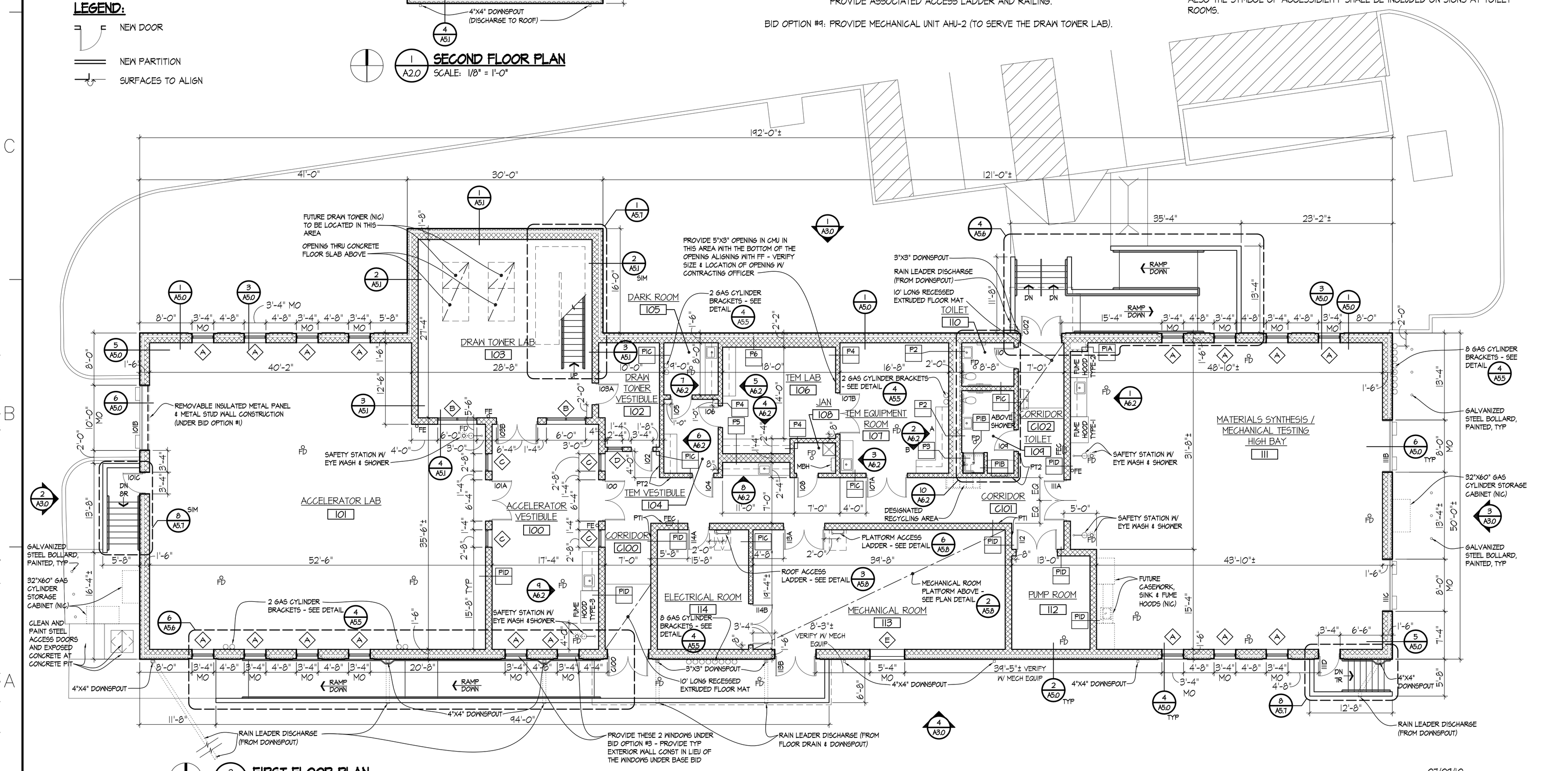

FIRST FLOOR PLAN

SCALE: 1/8" = 1'-0"

0 1' 4' 8' 16' 24'

SCALE: 1/8" = 1'-0"

07/09/10

CAUTION: IF SHEET IS LESS THAN 36" X 24" USE GRAPHIC SCALE

SYM	DESCRIPTION	DATE	APPR

NAVFAC

MARSHALL CRAFT ASSOCIATES, INC.

Marshall Craft Associates, Inc.
Architecture / Interior Design / Planning
6112 Yum Road, Baltimore, Maryland 21210-2611
410.532.3131 Fax: 410.532.3206

AE LOGO

SEAL

DES	DRW
REVIEWED BY	
PM/DM	
CHIEF ENG/ARCH	

DEPARTMENT OF THE NAVY
NAVFAC
NAVAL FACILITIES ENGINEERING COMMAND
WASHINGTON NAVY YARD, WASHINGTON D.C.
ROICC
NAVAL RESEARCH LABORATORY
DISTRICT OF COLUMBIA
RENOVATION OF BUILDING A69
WASHINGTON, D.C.
FLOOR PLAN

CODE ID. NO. 80091	SIZE D
SCALE:	1/8"=1'-0"
MAXIMO NO.	JPXMY
STA. PROJ. NO.	855305
WORK ORDER NO.	0010
CONSTR. CONTR. NO.	
NAVFAC DRAWING NO.	13022516
SHEET	16 OF 93

A2.0

DRAWFORM REVISION: 01 MAY 2006

REVDATE: FILE NAME: J:\09014.09\drawings\A40-Construction Docs 100%\A2.0.dwg LAYOUT NAME: A2.0 PLOTTED: Wednesday, July 07, 2010 – 4:13pm

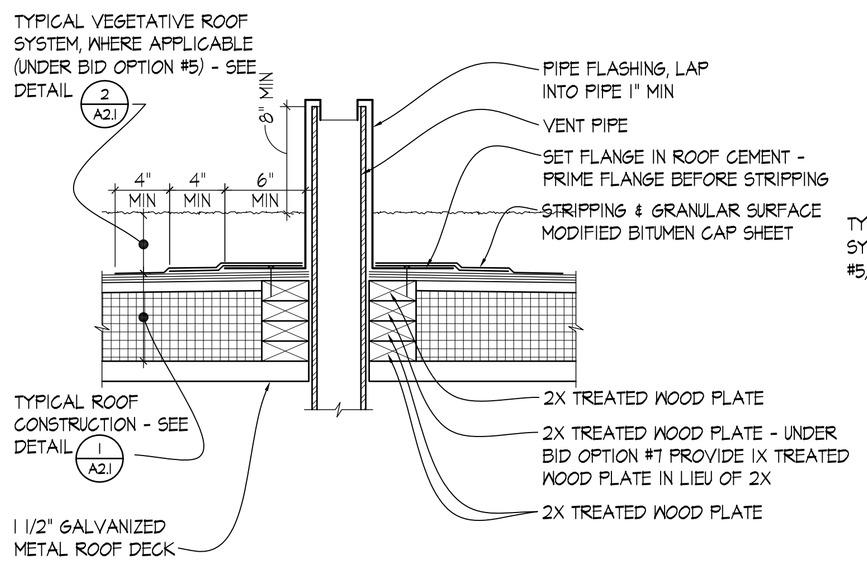

4/A2.1 **VENT PIPE DETAIL**
SCALE: 1-1/2" = 1'-0"

NOTE:
1. PROVIDE ADDITIONAL TREATED WOOD PLATES TO ACCOMMODATE HEIGHT OF TAPERED ROOF INSULATION @ ROOF CRICKETS
2. ONLY PROFILE OF VEGETATIVE ROOF IS SHOWN FOR CLARITY

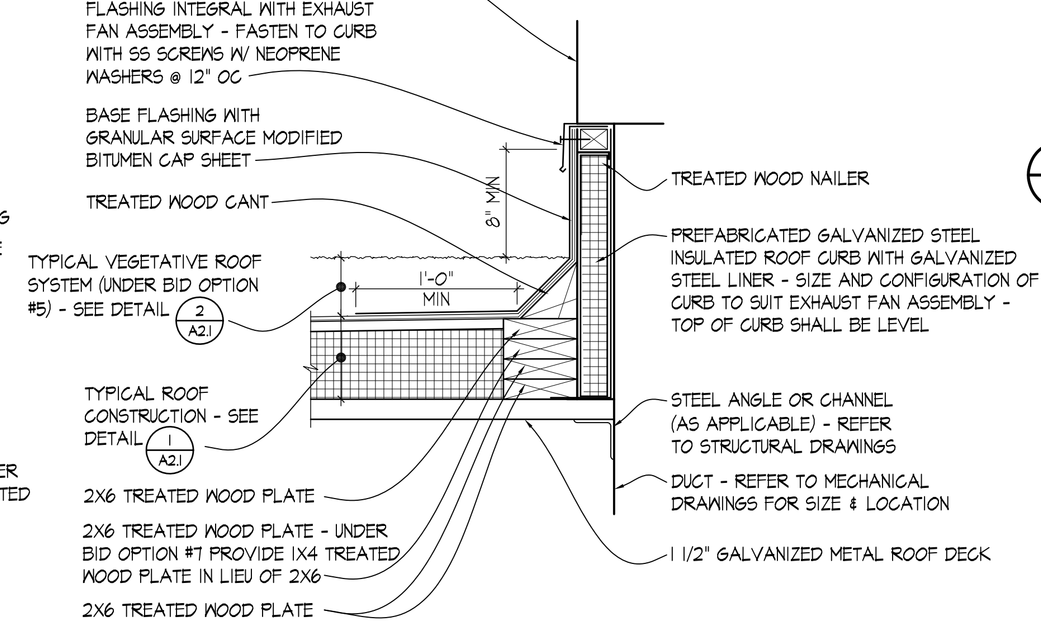

3/A2.1 **EXHAUST FAN CURB DETAIL**
SCALE: 1-1/2" = 1'-0"

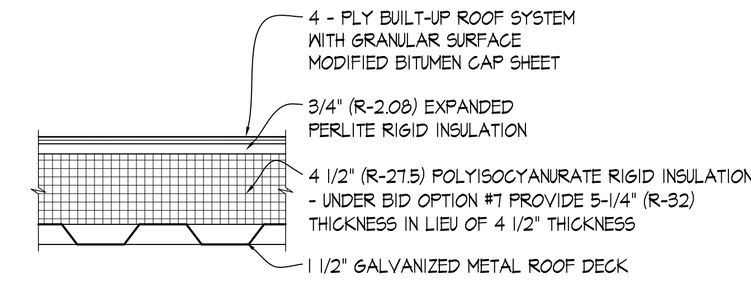

1/A2.1 **TYP ROOF CONSTRUCTION**
SCALE: 1-1/2" = 1'-0"

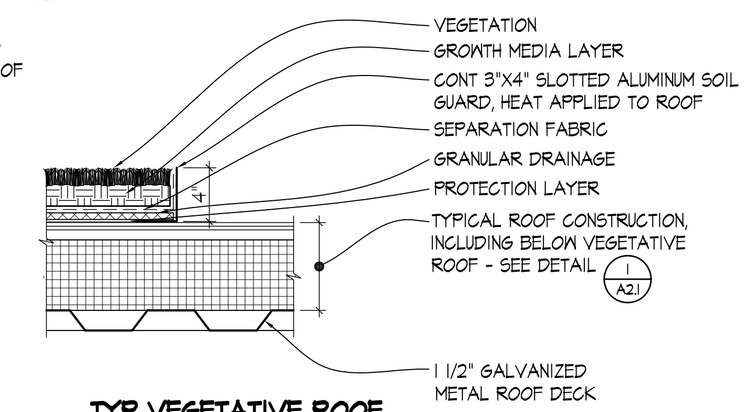

2/A2.1 **TYP VEGETATIVE ROOF CONSTRUCTION & EDGE DETAIL**
SCALE: 1-1/2" = 1'-0"

GENERAL ROOF NOTES:

1. ALL WOOD PLATES AND BLOCKING SHALL BE SOLID, TREATED WOOD CONSTRUCTION.
2. ALL EXPOSED FASTENERS SHALL BE STAINLESS STEEL, HEX HEAD WITH INTEGRAL SS AND NEOPRENE WASHERS.
3. GUTTER EXPANSION JOINTS SHALL COMPLY WITH SMACNA FIGURE 1-7

LEGEND:

- VENT PIPE - SEE DETAIL 4/A2.1
- SLOPE TO DRAIN
- WALKWAY PAVER
- MECHANICAL EQUIPMENT
- VEGETATIVE ROOF AREA (UNDER BID OPTION #5) - SEE DETAIL 2/A2.1
- SURFACES TO ALIGN

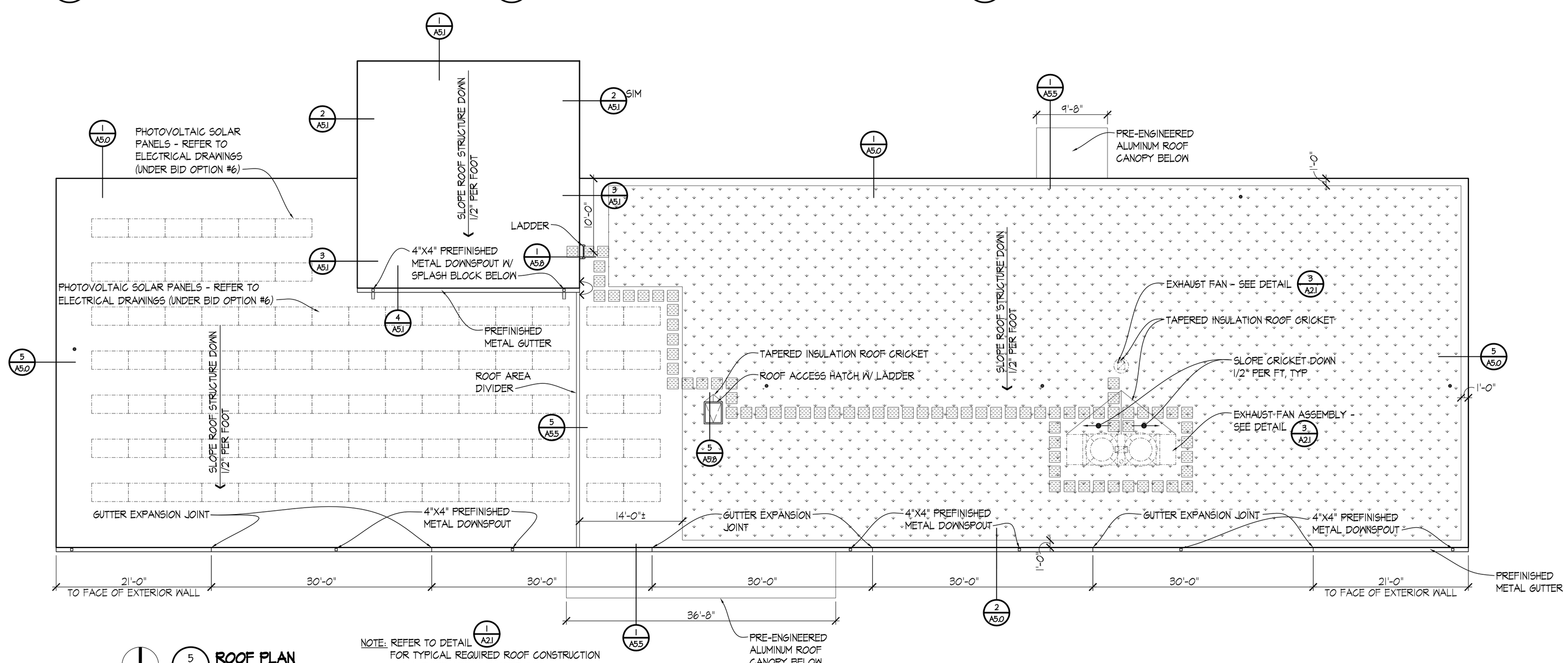

5/A2.1 **ROOF PLAN**
SCALE: 1/8" = 1'-0"

NOTE: REFER TO DETAIL 1/A2.1 FOR TYPICAL REQUIRED ROOF CONSTRUCTION @ ALL ROOF AREAS EXCEPT FOR PRE-ENGINEERED CANOPIES

SCALE: 1/8" = 1'-0"

SCALE: 1-1/2" = 1'-0"

07/09/10

CAUTION: IF SHEET IS LESS THAN 36" X 24" USE GRAPHIC SCALE

APPR	DATE	DESCRIPTION

NAVFAC

MARSHALL CRAFT ASSOCIATES
Marshall Craft Associates, Inc.
Architecture / Interior Design / Planning
6112 York Road, Baltimore, Maryland 21212-2611
410.532.2131 Fax: 410.532.5206

AE LOGO

SEAL

DES | DRW
REVIEWED BY
PM/DM
CHIEF ENG/ARCH

DEPARTMENT OF THE NAVY
NAVFAC
NAVAL FACILITIES ENGINEERING COMMAND
WASHINGTON NAVY YARD, WASHINGTON D.C.
ROICC
NAVAL RESEARCH LABORATORY
DISTRICT OF COLUMBIA
RENOVATION OF BUILDING A69
WASHINGTON, D.C.
ROOF PLAN AND DETAILS

CODE ID. NO. 80091	SIZE D
SCALE:	AS_SHOWN
MAXIMO NO.	JPXMY
STA. PROJ. NO.	855305
WORK ORDER NO.	0010
CONSTR. CONTR. NO.	
NAVFAC DRAWING NO.	13022517
SHEET	17 of 93

A2.1

DRAWFORM REVISION: 01 MAY 2006

REVDATE: FILE NAME: J:\09014.09\drawings\A40-Construction Docs 1005\A2.1.dwg LAYOUT NAME: A2.1 PLOTTED: Wednesday, July 07, 2010 – 11:44am

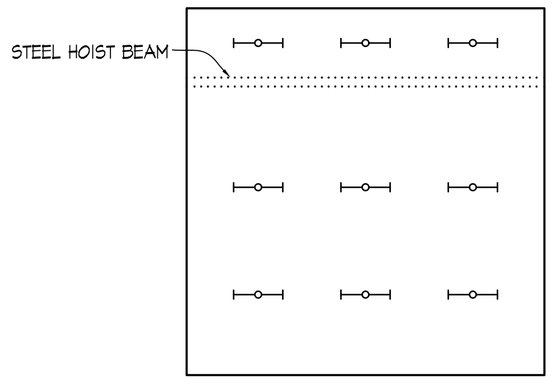

1 / A2.2 **SECOND FLOOR REFLECTED CEILING PLAN**
SCALE: 1/8" = 1'-0"

GENERAL REFLECTED CEILING PLAN NOTES:

1. SEE MECHANICAL AND ELECTRICAL DRAWINGS FOR ADDITIONAL INFORMATION ON ALL DEVICES. SOME ITEMS NOT SHOWN (IE EXIT SIGNS, ETC)
2. CENTER SUSPENDED CEILING GRID IN ROOM AS SHOWN UNLESS DIMENSIONS INDICATE OTHERWISE.
3. CENTER ALL FIXTURES, INCLUDING SPRINKLER HEADS, IN CEILING PANELS UNLESS SHOWN OTHERWISE.

LEGEND:

- PARTITION
- 2'x4' SUSPENDED ACOUSTICAL CEILING PANEL SYSTEM
- 2'x2' SUSPENDED ACOUSTICAL CEILING PANEL SYSTEM
- 2'x4' RECESSED FLUORESCENT LIGHT FIXTURE
- 2'x2' RECESSED FLUORESCENT LIGHT FIXTURE
- 1'x4' SURFACE MOUNTED OR SUSPENDED FLUORESCENT LIGHT FIXTURE
- RECESSED DOWNLIGHT
- DARK ROOM LIGHT
- RETURN / EXHAUST AIR GRILLE
- SUPPLY AIR DIFFUSER
- EXHAUST DUCT FROM FUME HOOD

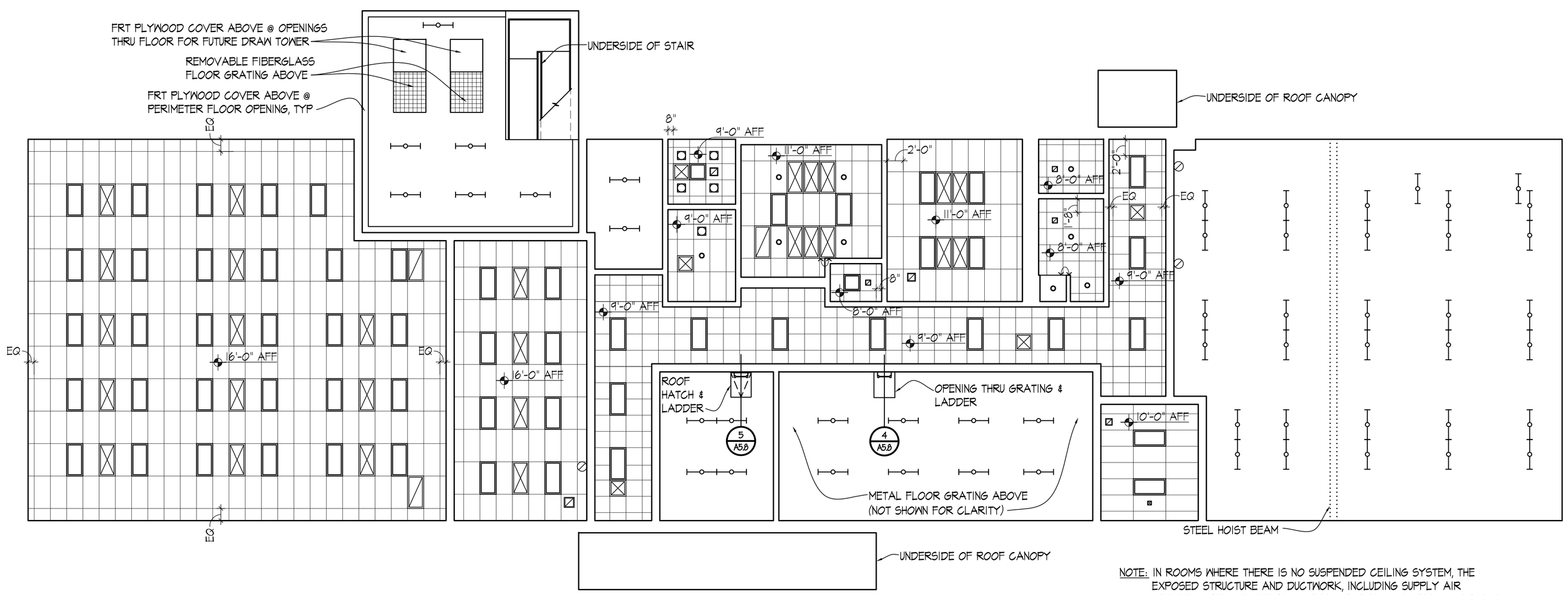

NOTE: IN ROOMS WHERE THERE IS NO SUSPENDED CEILING SYSTEM, THE EXPOSED STRUCTURE AND DUCTWORK, INCLUDING SUPPLY AIR DIFFUSERS AND RETURN AIR GRILLES, ARE NOT SHOWN FOR CLARITY.

2 / A2.2 **FIRST FLOOR REFLECTED CEILING PLAN**
SCALE: 1/8" = 1'-0"

0 1' 4' 8' 16' 24'
SCALE: 1/8" = 1'-0"

07/09/10

CAUTION: IF SHEET IS LESS THAN 36" X 24" USE GRAPHIC SCALE

SYM	DESCRIPTION	DATE	APPR.

NAVFAC

MARSHALL CROFT ASSOCIATES
Marshall Croft Associates, Inc.
Architecture / Interior Design / Planning
6112 York Road, Baltimore, Maryland 21212-2611
410.532.2131 Fax: 410.532.5206

AE LOGO

SEAL

DES | DRW
REVIEWED BY
PM/DM
CHIEF ENG/ARCH

DEPARTMENT OF THE NAVY
NAVAL FACILITIES ENGINEERING COMMAND
WASHINGTON NAVY YARD, WASHINGTON D.C.
NAVFAC
ROICC
NAVAL RESEARCH LABORATORY
DISTRICT OF COLUMBIA
RENOVATION OF BUILDING A69
WASHINGTON, D.C.
REFLECTED CEILING PLAN

CODE ID. NO. 80091 | SIZE D
SCALE: 1/8"=1'-0"
MAXIMO NO. JPXMY
STA. PROJ. NO. 855305
WORK ORDER NO. 0010
CONSTR. CONTR. NO.
NAVFAC DRAWING NO. 13022518
SHEET 18 OF 93
A2.2

DRAWFORM REVISION: 01 MAY 2006

REVDATE: FILE NAME: J:\09014.09\drawings\A40-Construction Docs 100%\A2.2.dwg LAYOUT NAME: A2.2 PLOTTED: Wednesday, July 07, 2010 - 11:45am

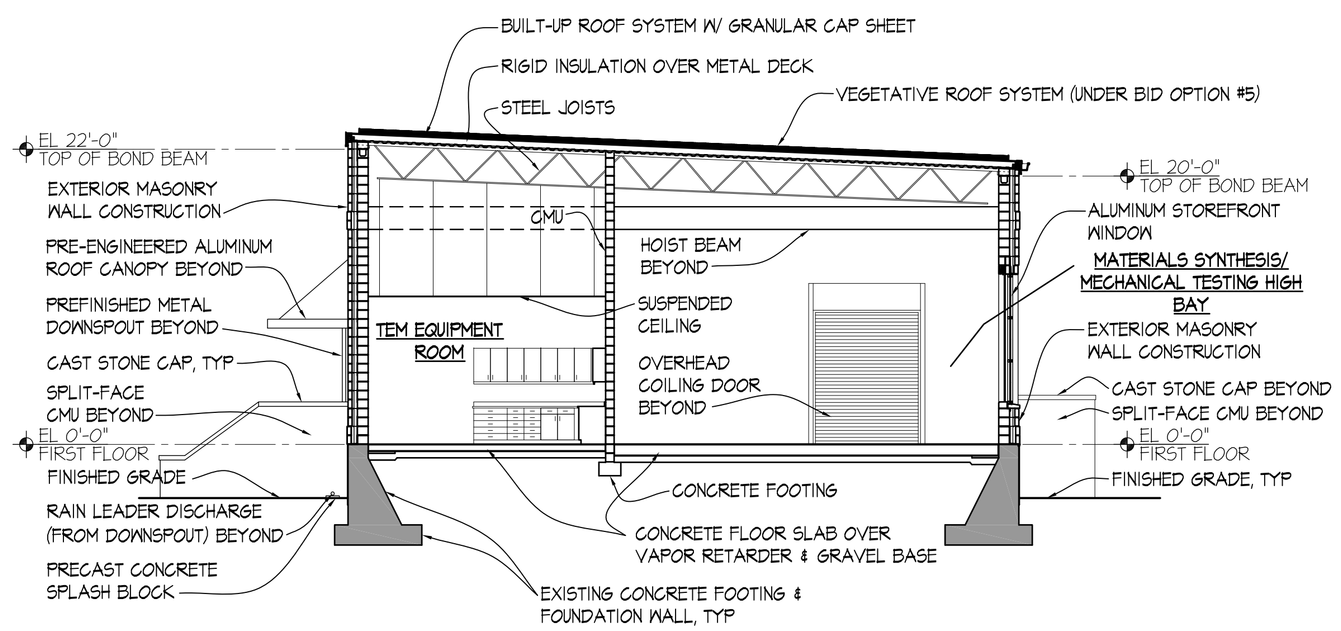

2 A4.0 **TYPICAL BUILDING SECTION**
SCALE: 1/8" = 1'-0"

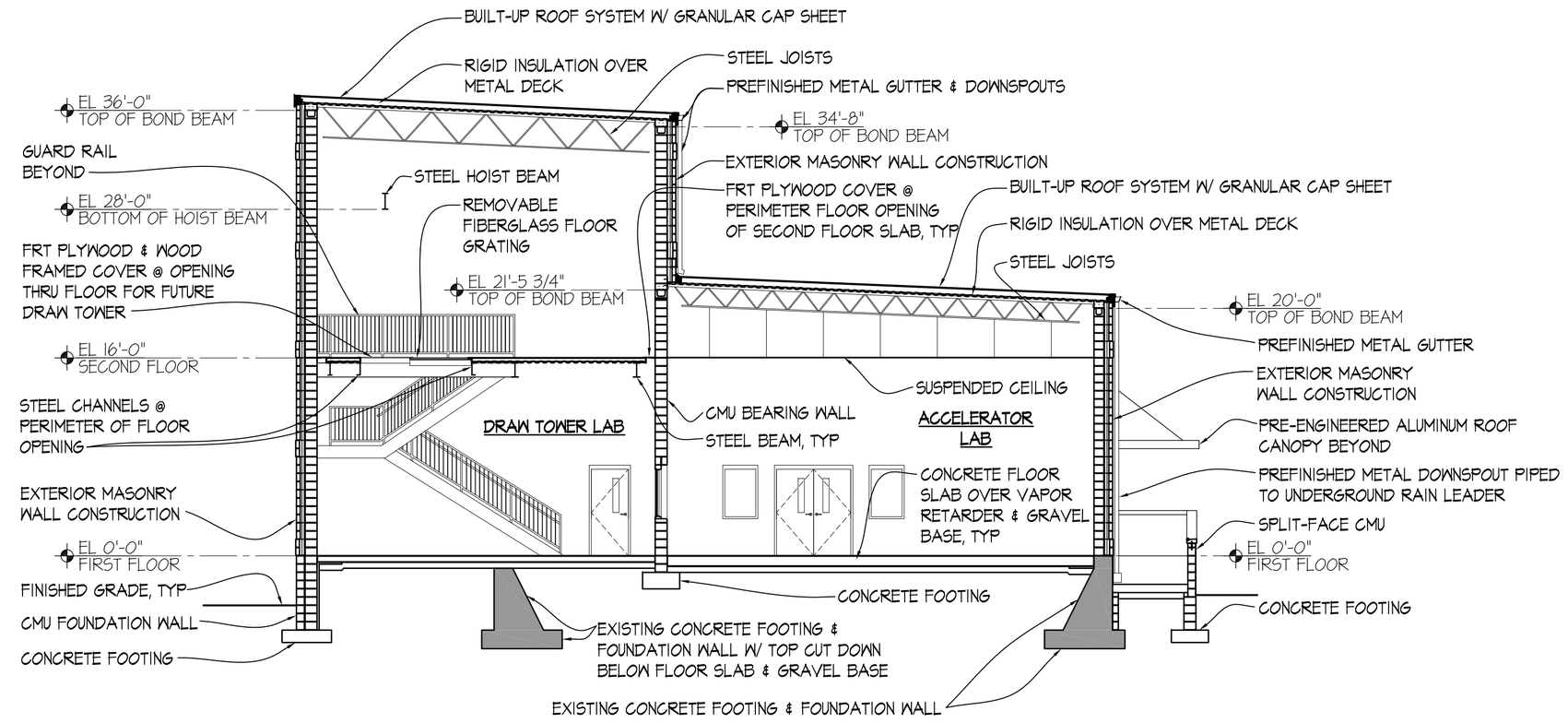

1 A4.0 **BUILDING SECTION THRU DRAW TOWER LAB**
SCALE: 1/8" = 1'-0"

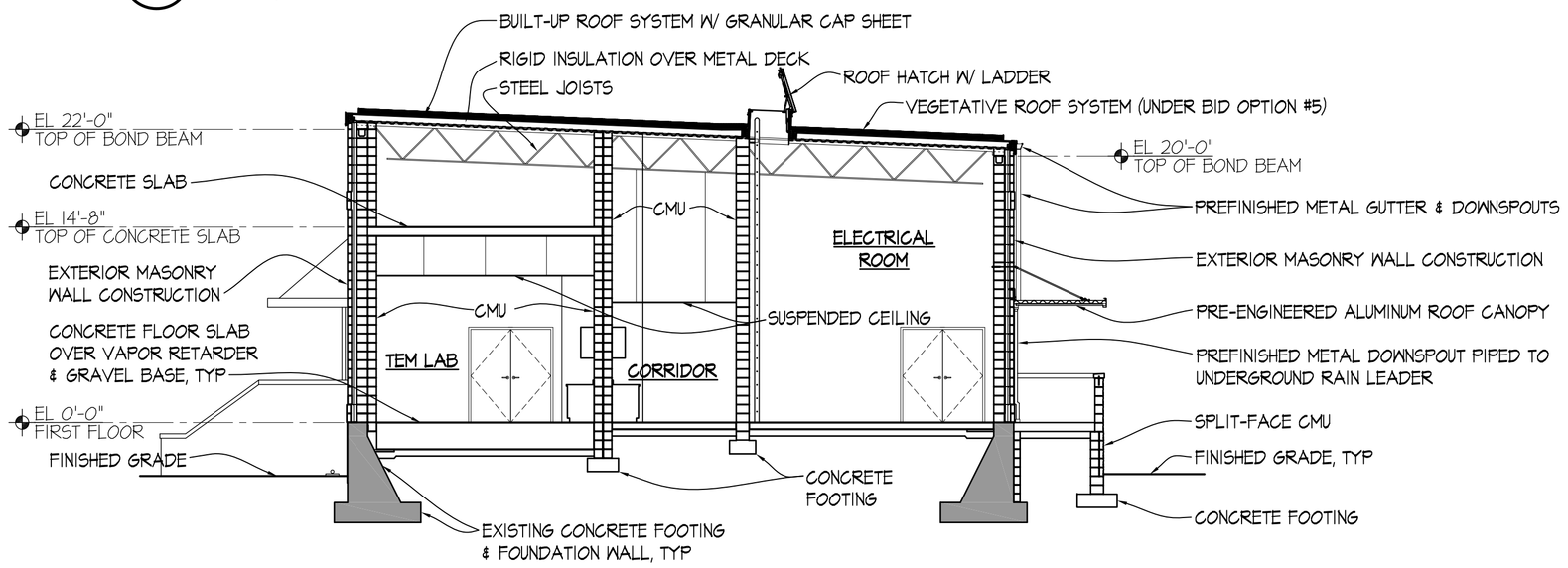

3 A4.0 **BUILDING SECTION THRU TEM LAB**
SCALE: 1/8" = 1'-0"

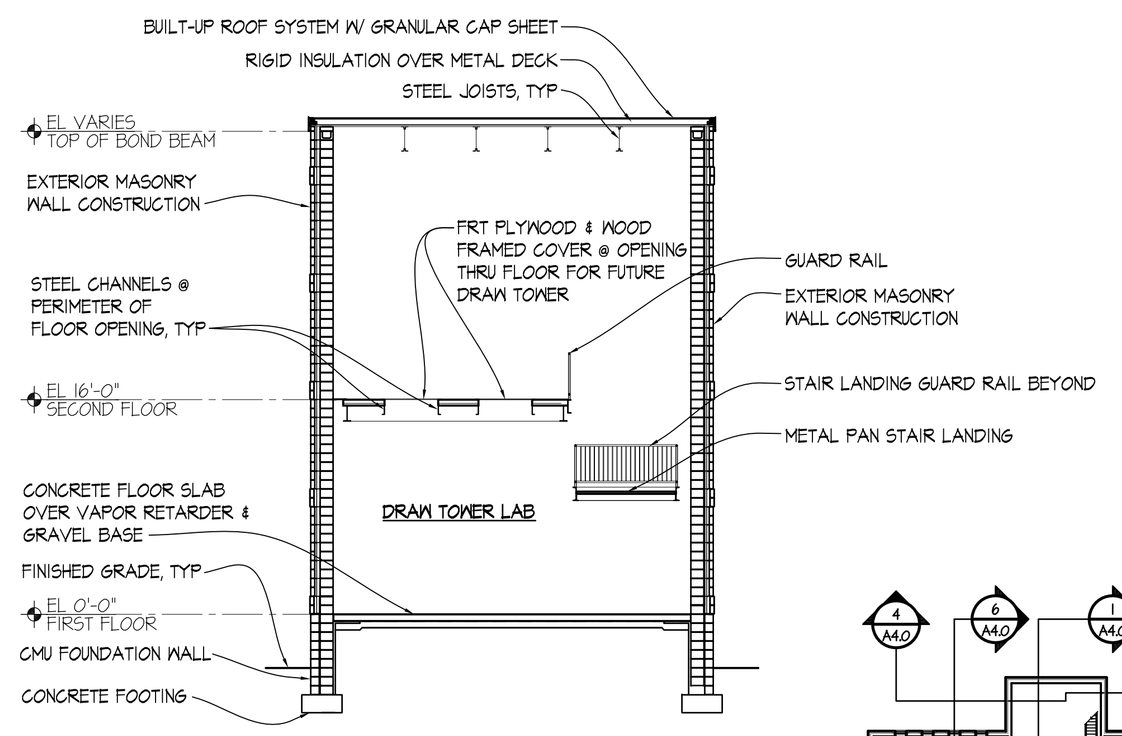

4 A4.0 **BUILDING SECTION THRU DRAW TOWER LAB**
SCALE: 1/8" = 1'-0"

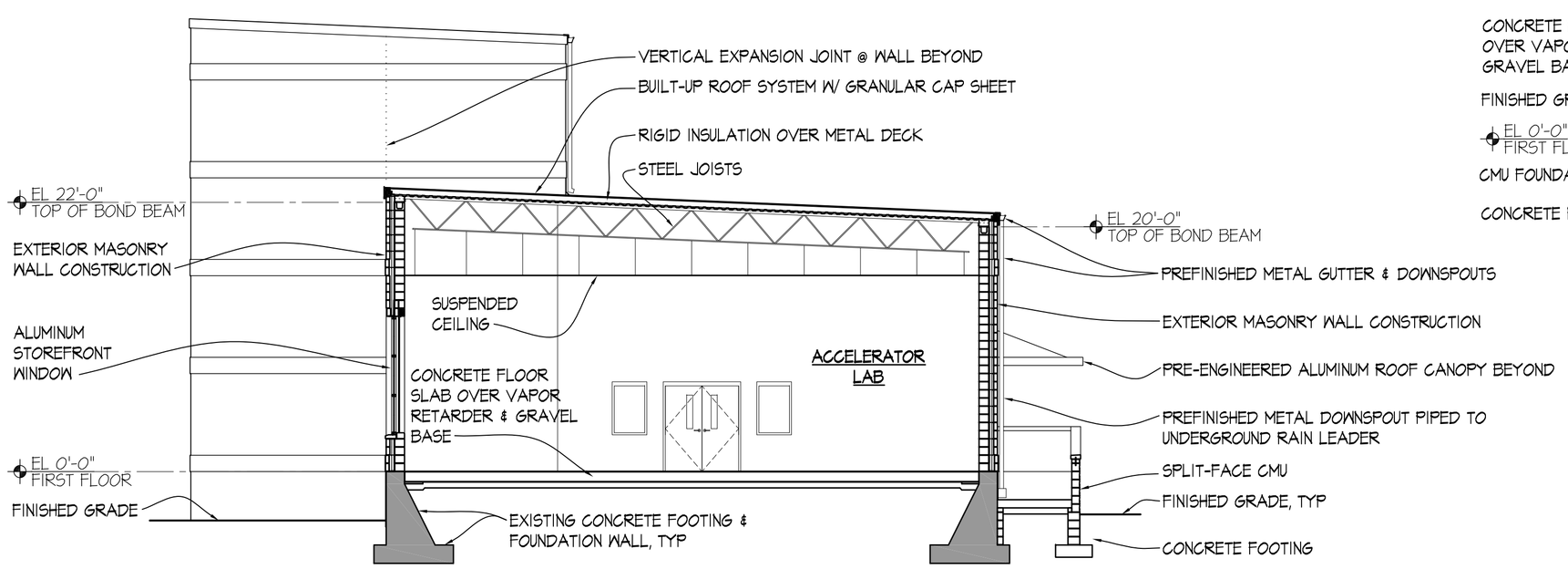

6 A4.0 **BUILDING SECTION THRU ACCELERATOR LAB**
SCALE: 1/8" = 1'-0"

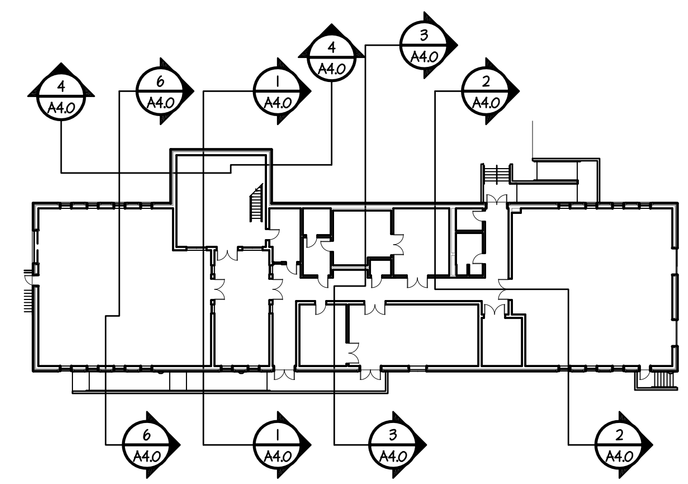

5 A4.0 **KEY PLAN**
SCALE: 1/32" = 1'-0"

SCALE: 1/32" = 1'-0" (0, 8', 16', 32', 64', 96')
SCALE: 1/8" = 1'-0" (0, 1', 4', 8', 16', 24')

07/09/10

CAUTION: IF SHEET IS LESS THAN 36" X 24" USE GRAPHIC SCALE

APPR	DATE	DESCRIPTION	SYM

NAVFAC

MARSHALL CRAFT ASSOCIATES
Marshall Craft Associates, Inc.
Architecture / Interior Design / Planning
6112 Yum Road, Baltimore, Maryland 21212-2611
410.532.3131 Fax: 410.532.3206

AE LOGO

SEAL

DES | DRW
REVIEWED BY
PM/DM
CHIEF ENG/ARCH

DEPARTMENT OF THE NAVY
NAVFAC
NAVAL FACILITIES ENGINEERING COMMAND
WASHINGTON NAVY YARD, WASHINGTON D.C.
ROICC
NAVAL RESEARCH LABORATORY
DISTRICT OF COLUMBIA
RENOVATION OF BUILDING A69
WASHINGTON, D.C.
BUILDING SECTIONS

CODE ID. NO. 80091 | SIZE D
SCALE: AS_SHOWN
MAXIMO NO. JPXMY
STA. PROJ. NO. 855305
WORK ORDER NO. 0010
CONSTR. CONTR. NO.
NAVFAC DRAWING NO. 13022520
SHEET 20 OF 93

A4.0

DRAWFORM REVISION: 01 MAY 2006

REVDATE: FILE NAME: J:\09014.09\drawings\A40-Construction Docs 100%\A4.0.dwg LAYOUT NAME: A4.0 PLOTTED: Wednesday, July 07, 2010 - 11:46am

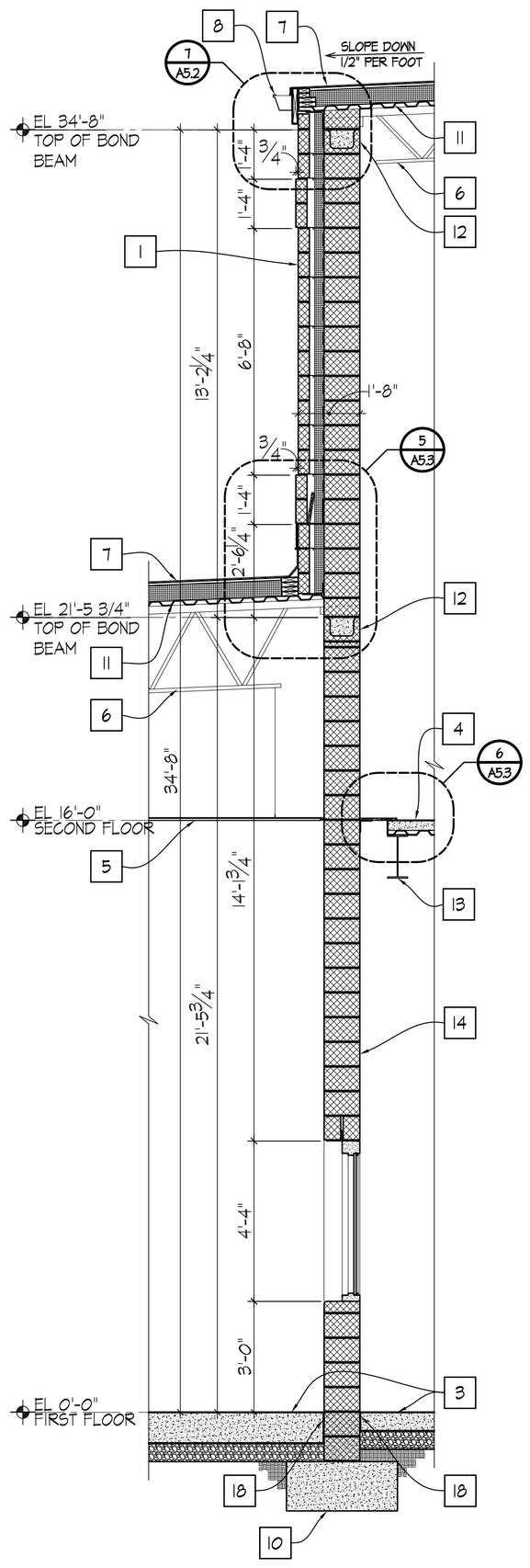

4 / A5.1 **WALL SECTION @ DRAW TOWER SOUTH WALL**
SCALE: 3/8" = 1'-0"

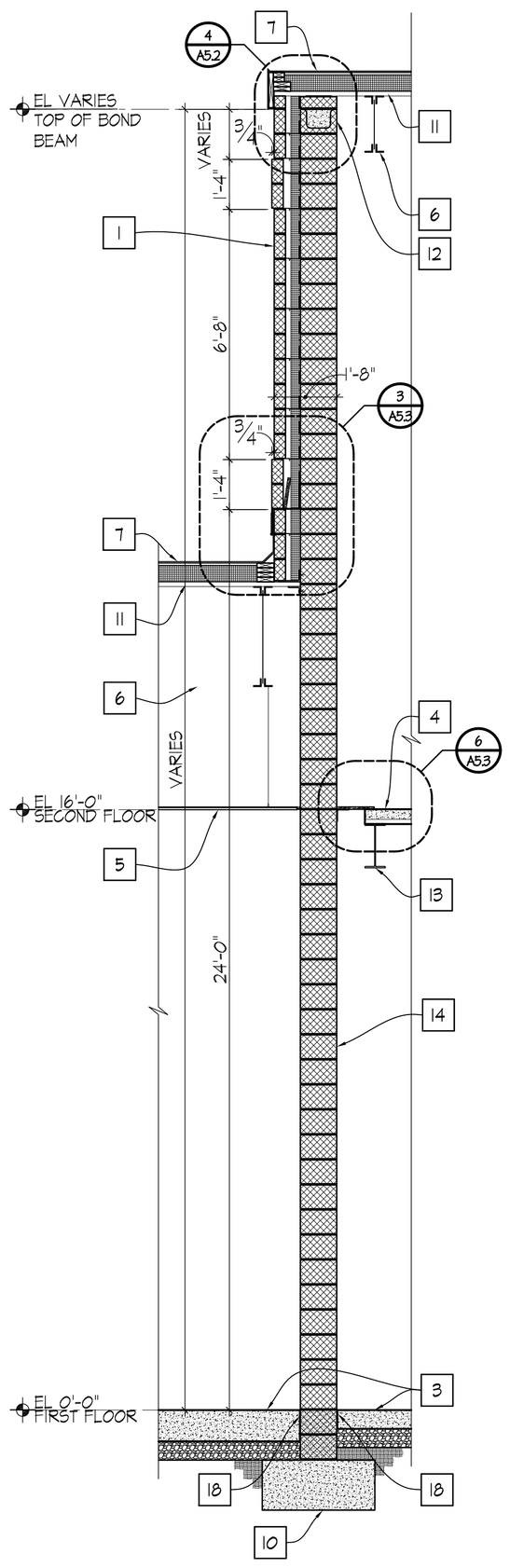

3 / A5.1 **WALL SECTION @ DRAW TOWER EAST & WEST WALLS**
SCALE: 3/8" = 1'-0"

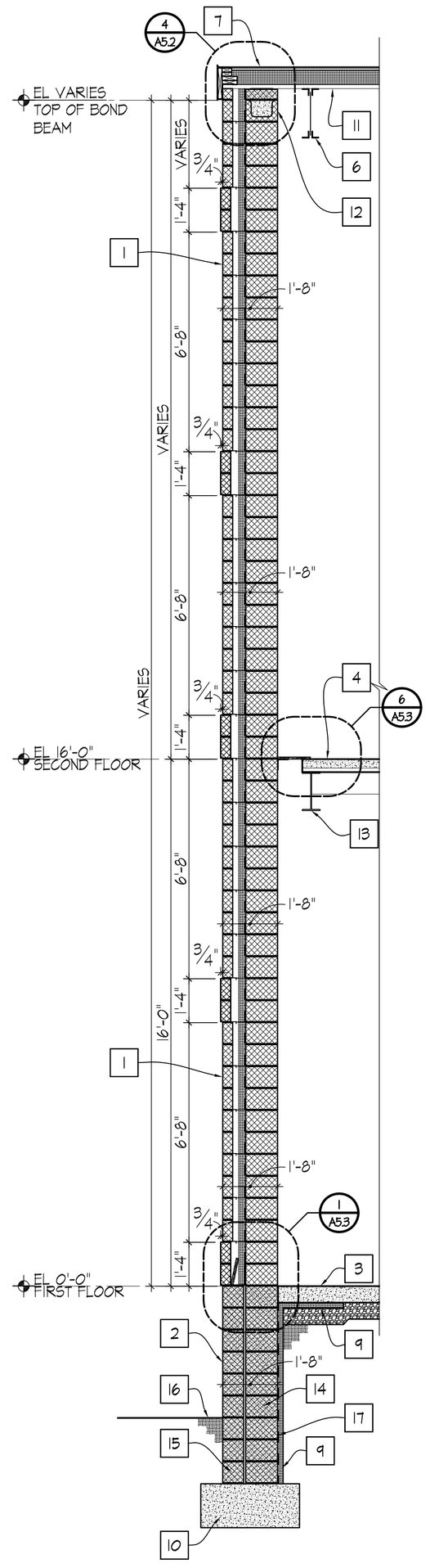

2 / A5.1 **EXT WALL SECTION @ DRAW TOWER EAST & WEST WALLS**
SCALE: 3/8" = 1'-0"

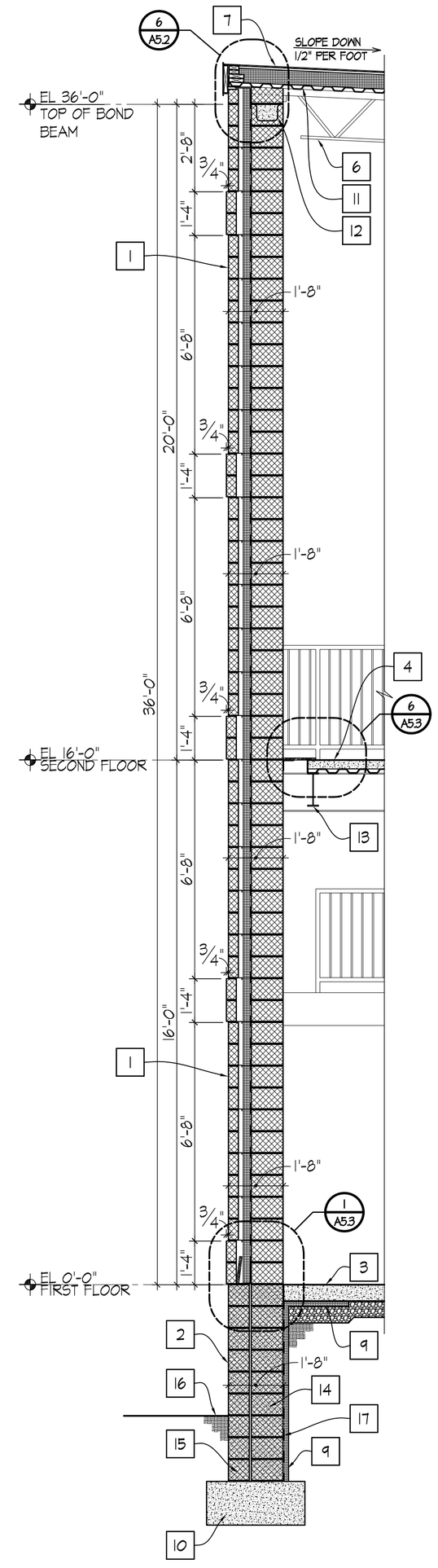

1 / A5.1 **EXT WALL SECTION @ DRAW TOWER NORTH WALL**
SCALE: 3/8" = 1'-0"

WALL SECTION NOTES:

(APPLY TO THIS SHEET ONLY)

1. EXTERIOR WALL CONSTRUCTION @ DRAW TOWER CONSISTING OF:
   - 4" CMU VENEER - SEE BUILDING ELEVATIONS FOR TYPE
   - AIR SPACE
   - 2" (R-10) EXTRUDED POLYSTYRENE RIGID INSULATION - UNDER BID OPTION #1 PROVIDE 3" (R-15) THICKNESS IN LIEU OF 2" THICKNESS
   - BITUMINOUS DAMPROOFING APPLIED TO FACE OF CMU
   - 12" CMU W/ GALVANIZED HORIZONTAL JOINT REINFORCEMENT @ 16" OC VERTICALLY W/ ADJUSTABLE VENEER ANCHORS
2. 8" SPLIT-FACE CMU, EXTEND 6" MIN BELOW GRADE - PROVIDE GALVANIZED HORIZONTAL JOINT REINFORCEMENT @ 16" OC VERTICALLY - GROUT CMU SOLID
3. CONCRETE FLOOR SLAB OVER 15 MIL REINFORCED POLYETHYLENE VAPOR RETARDER & 6" GRAVEL - REFER TO STRUCTURAL DRAWINGS
4. CONCRETE FLOOR SLAB ON METAL DECK - REFER TO STRUCTURAL DRAWINGS
5. SUSPENDED CEILING (WHERE APPLICABLE) - SEE REFLECTED CEILING PLAN
6. STEEL JOISTS - REFER TO STRUCTURAL DRAWINGS
7. BUILT-UP ROOF SYSTEM OVER RIGID INSULATION - SEE DETAIL 1/A21
8. PREFINISHED METAL GUTTER
9. 2" EXTRUDED POLYSTYRENE RIGID INSULATION
10. CONCRETE FOOTING - REFER TO STRUCTURAL DRAWINGS
11. 1 1/2" GALVANIZED METAL DECK
12. BOND BEAM - REFER TO STRUCTURAL DRAWINGS
13. STEEL BEAM - REFER TO STRUCTURAL DRAWINGS
14. 12" CMU W/ GALVANIZED HORIZONTAL JOINT REINFORCEMENT @ 16" OC VERTICALLY - GROUT CMU SOLID BELOW FF
15. 8" CMU (BELOW GRADE) W/ GALVANIZED HORIZONTAL JOINT REINFORCEMENT @ 16" OC VERTICALLY - GROUT CMU SOLID
16. FINISHED GRADE
17. BITUMINOUS DAMPROOFING
18. 1/2" EXPANSION JOINT

0 1' 2' 4' 6' 8'
SCALE: 3/8" = 1'-0"

07/09/10

CAUTION: IF SHEET IS LESS THAN 36" X 24" USE GRAPHIC SCALE

SYM	DESCRIPTION	DATE	APPR

NAVFAC

MARSHALL CRAFT ASSOCIATES

Marshall Craft Associates, Inc.
Architecture / Interior Design / Planning
6112 York Road, Baltimore, Maryland 21212-2611
410.532.2131 Fax: 410.532.5206

AE LOGO

SEAL

DES | DRW
REVIEWED BY
PM/DM
CHIEF ENG/ARCH

DEPARTMENT OF THE NAVY
NAVAL FACILITIES ENGINEERING COMMAND
WASHINGTON NAVY YARD, WASHINGTON D.C.
NAVFAC
ROICC:
NAVAL RESEARCH LABORATORY DISTRICT OF COLUMBIA
RENOVATION OF BUILDING A69
WASHINGTON, D.C.
WALL SECTIONS

CODE ID. NO. 80091	SIZE D
SCALE:	3/8"=1'-0"
MAXIMO NO.	JPXMY
STA. PROJ. NO.	855305
WORK ORDER NO.	0010
CONSTR. CONTR. NO.	
NAVFAC DRAWING NO.	13022522
SHEET	22 OF 93

A5.1

DRAWFORM REVISION: 01 MAY 2006

REVDATE: FILE NAME: J:\09014.09\drawings\A40-Construction Docs 100%\A5.1.dwg LAYOUT NAME: A5.1 PLOTTED: Wednesday, July 07, 2010 - 11:48am

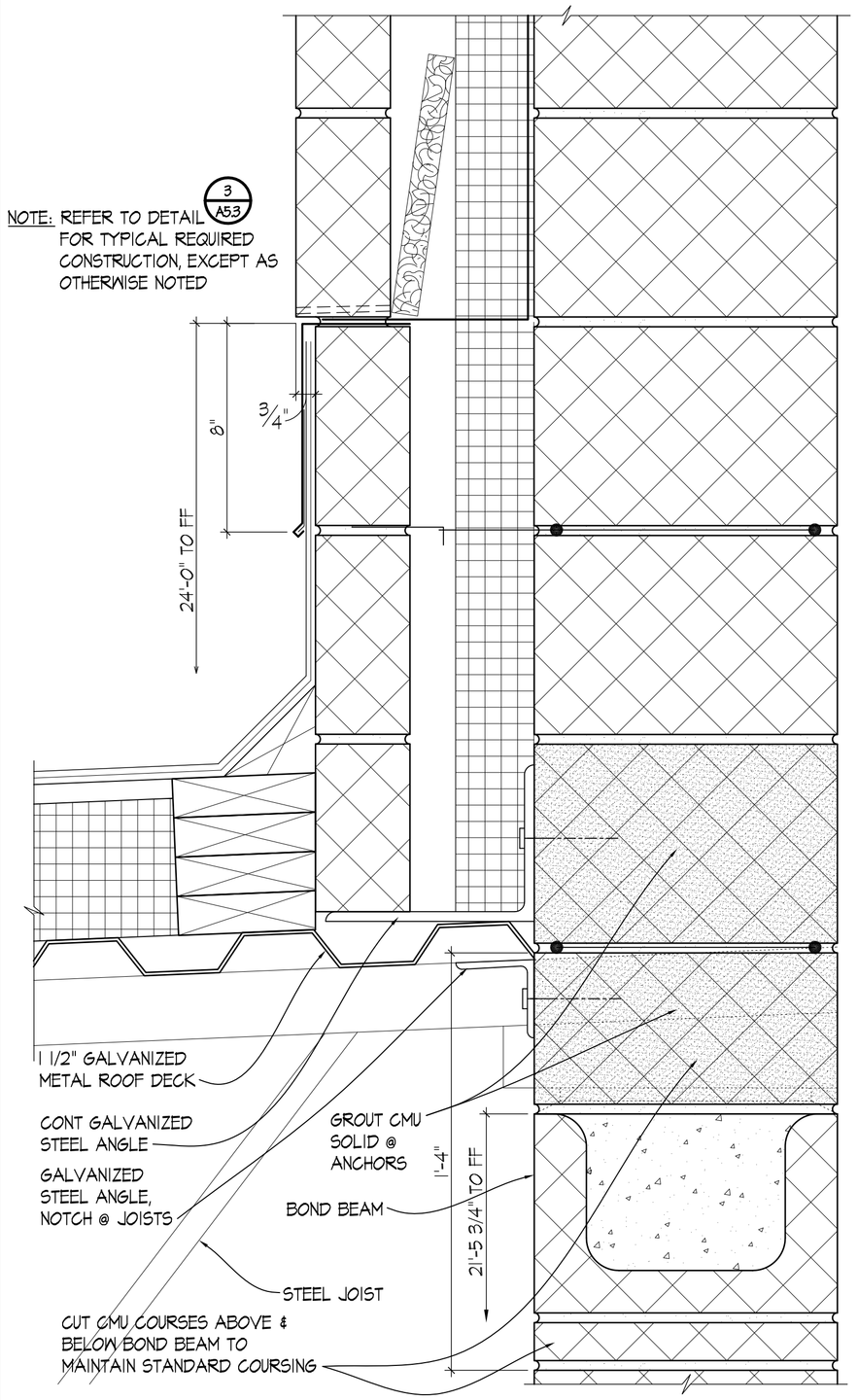

5 / A5.3 ROOF/WALL CONNECTION DETAIL @ DRAW TOWER SOUTH WALL
SCALE: 3" = 1'-0"

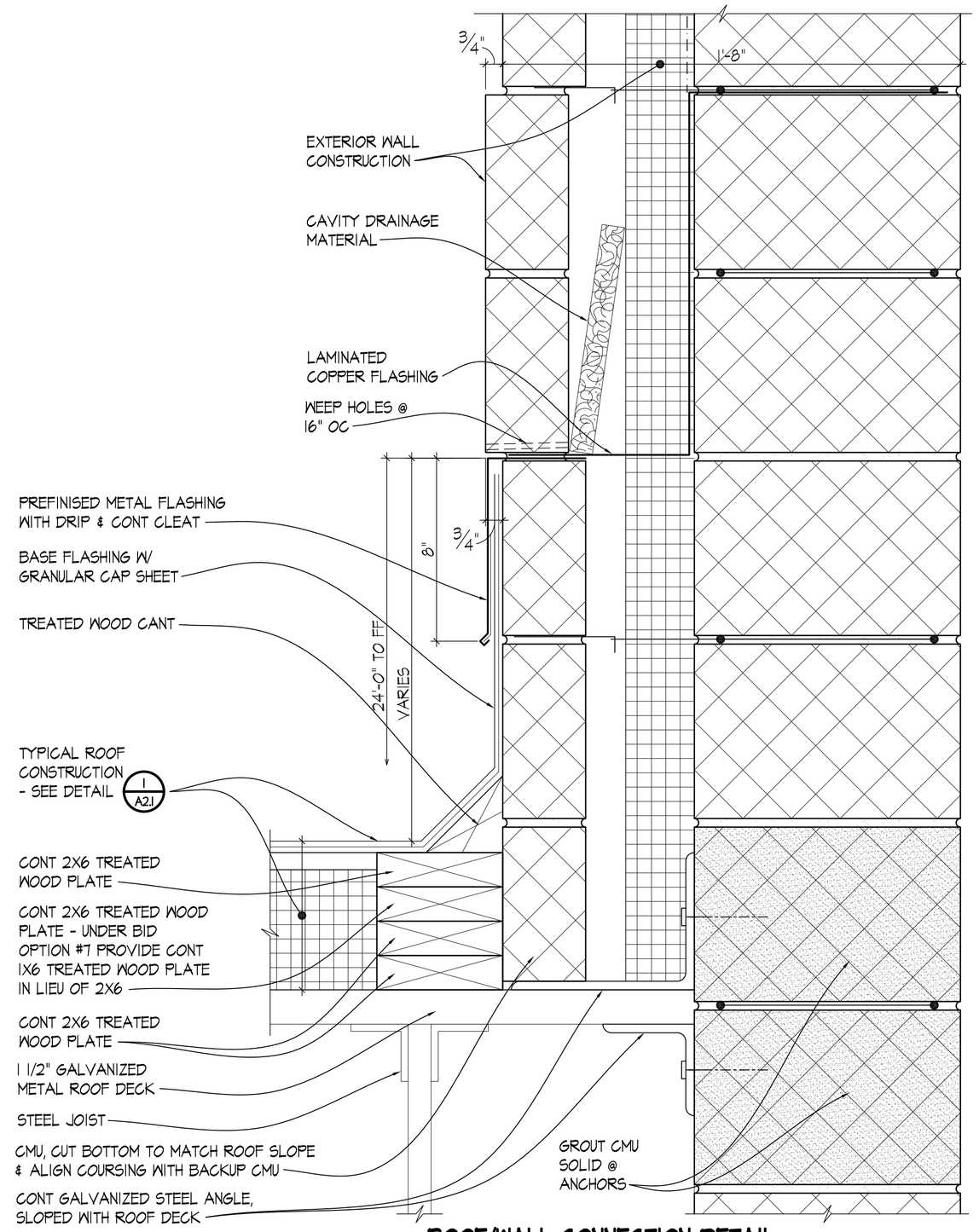

3 / A5.3 ROOF/WALL CONNECTION DETAIL @ DRAW TOWER EAST & WEST WALLS
SCALE: 3" = 1'-0"

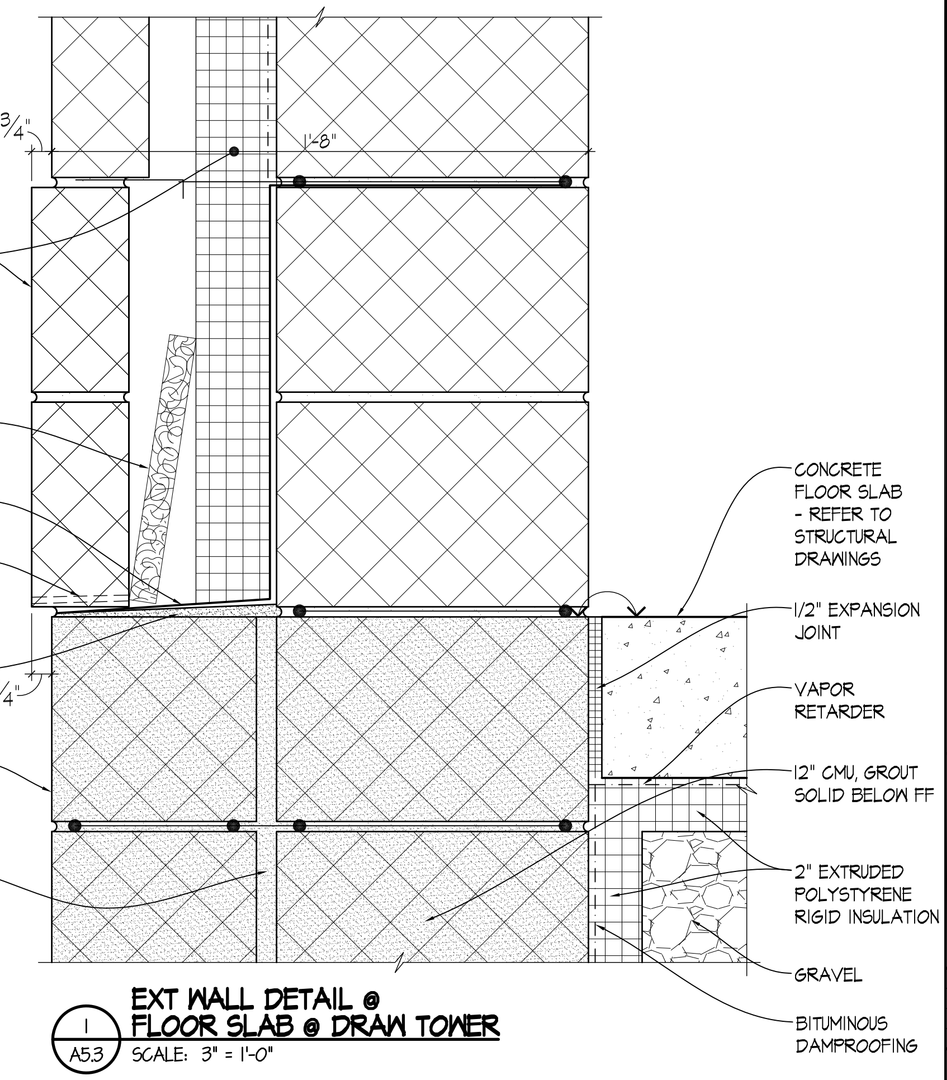

1 / A5.3 EXT WALL DETAIL @ FLOOR SLAB @ DRAW TOWER
SCALE: 3" = 1'-0"

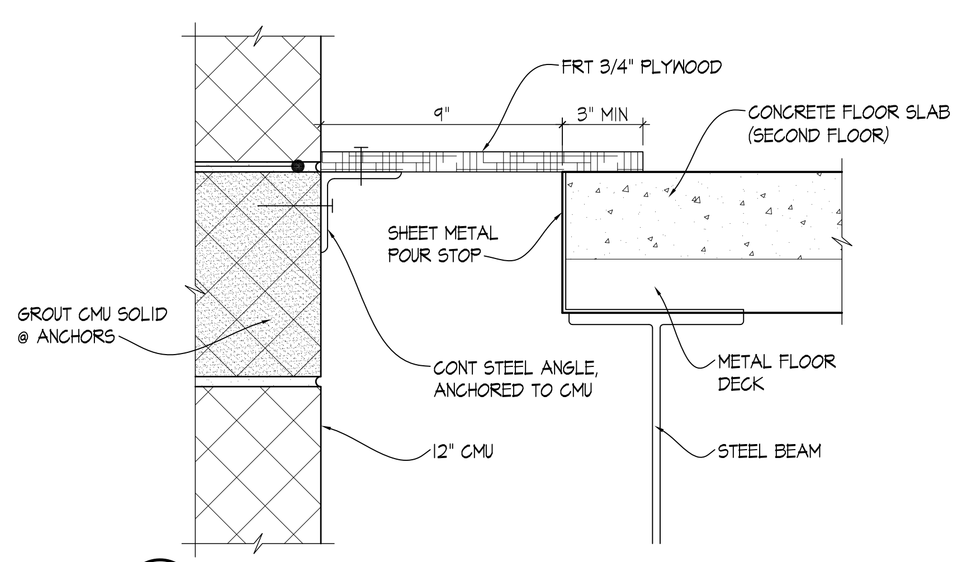

6 / A5.3 DRAW TOWER PERIMETER TEMPORARY COVER DETAIL
SCALE: 3" = 1'-0"

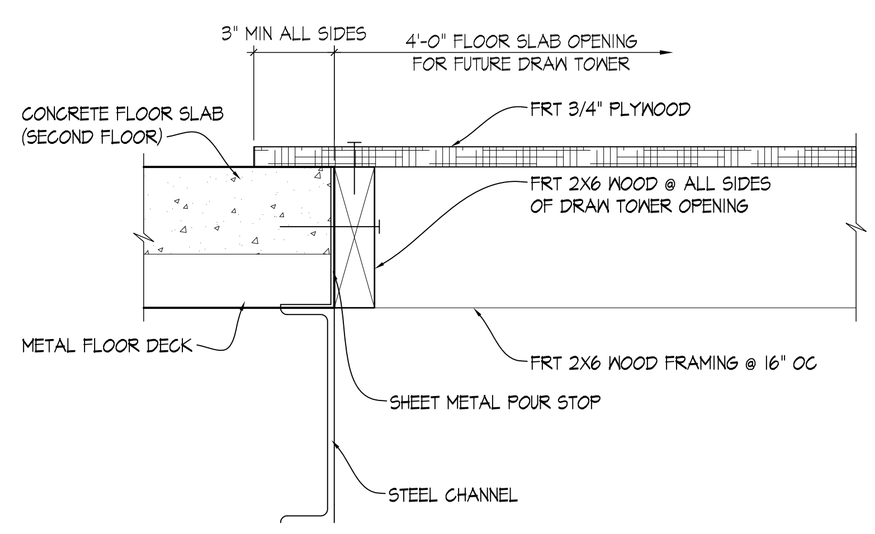

4 / A5.3 DRAW TOWER OPENING TEMPORARY COVER DETAIL
SCALE: 3" = 1'-0"

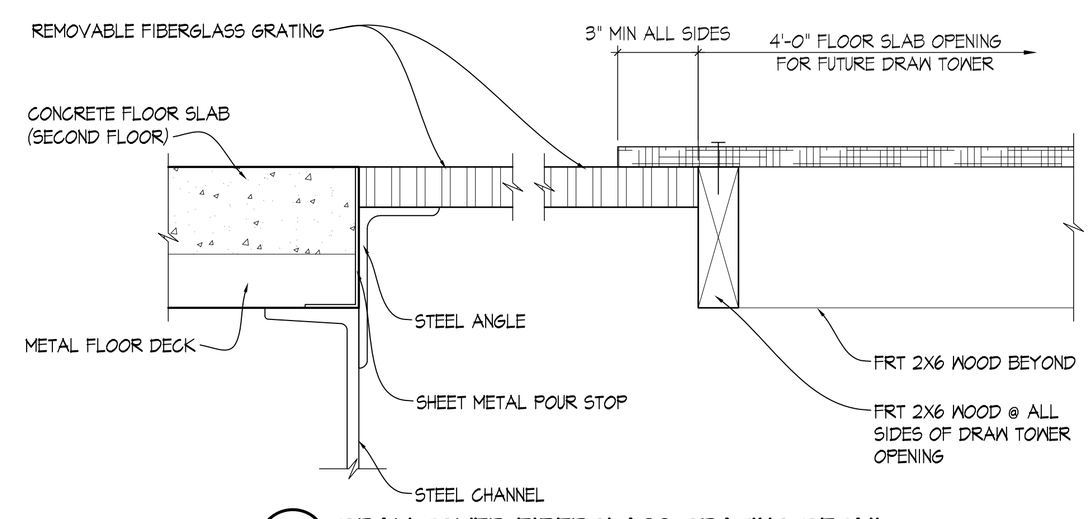

2 / A5.3 DRAW TOWER FIBERGLASS GRATING DETAIL
SCALE: 3" = 1'-0"

07/09/10

0 1" 2" 4" 8" 12"
SCALE: 3" = 1'-0"

CAUTION: IF SHEET IS LESS THAN 36" X 24" USE GRAPHIC SCALE

SYM	DESCRIPTION	DATE	APPR

NAVFAC

MCA MARSHALL CRAFT ASSOCIATES, INC.
Marshall Craft Associates, Inc.
Architecture / Interior Design / Planning
6112 York Road, Baltimore, Maryland 21212-2611
410.532.2131 Fax 410.532.5206

AE LOGO

SEAL

DES | DRW
REVIEWED BY
PM/DM
CHIEF ENG/ARCH

DEPARTMENT OF THE NAVY
NAVAL FACILITIES ENGINEERING COMMAND
WASHINGTON NAVY YARD, WASHINGTON D.C.
NAVFAC
ROICC
NAVAL RESEARCH LABORATORY
DISTRICT OF COLUMBIA
RENOVATION OF BUILDING A69
WASHINGTON, D.C.
DETAILS

CODE ID. NO. 80091 | SIZE D
SCALE: 3"=1'-0"
MAXIMO NO. JPXMY
STA. PROJ. NO. 855305
WORK ORDER NO. 0010
CONSTR. CONTR. NO.
NAVFAC DRAWING NO. 13022524
SHEET 24 OF 93
A5.3

DRAWFORM REVISION: 01 MAY 2006

REV/DATE: FILE NAME: J:\09014.09\drawings\A40-Construction Docs 100%\A5.3.dwg LAYOUT NAME: A5.3 PLOTTED: Wednesday, July 07, 2010 - 11:50am

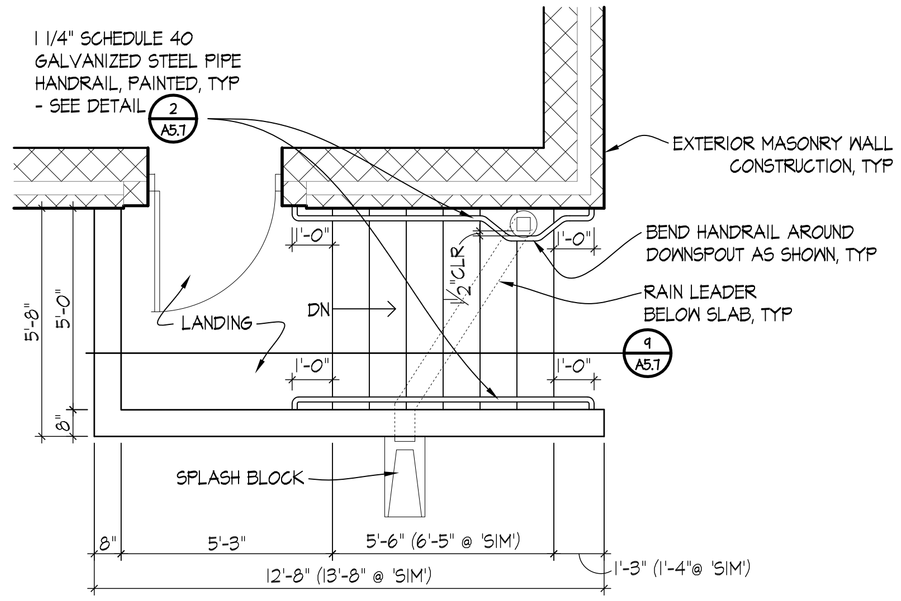

8 A5.7 **ENLARGED EXT SOUTH STAIR PLAN (WEST STAIR 'SIM')**
SCALE: 3/8" = 1'-0"

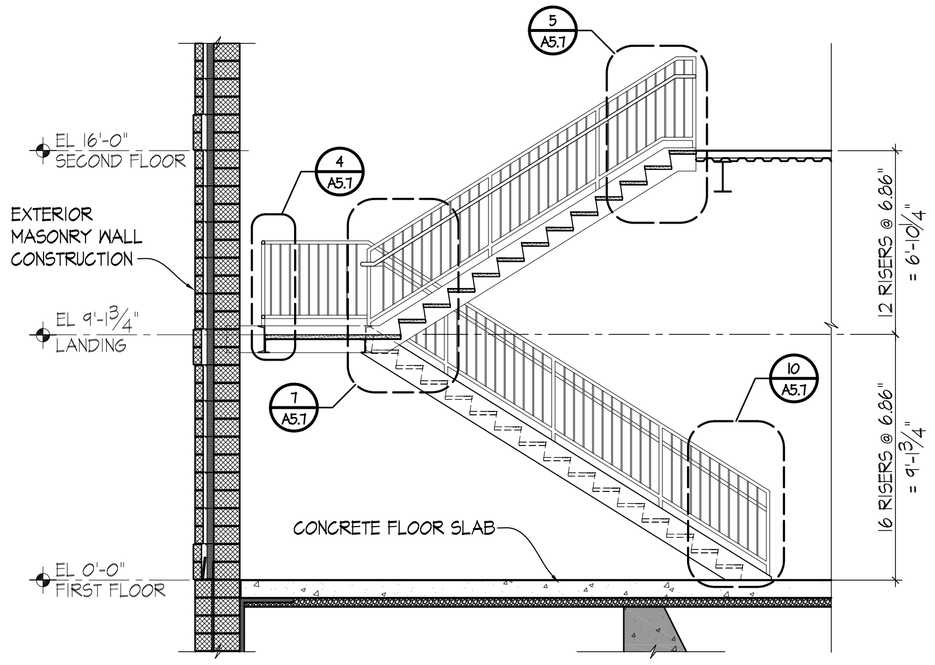

6 A5.7 **DRAW TOWER STAIR SECTION**
SCALE: 1/4" = 1'-0"

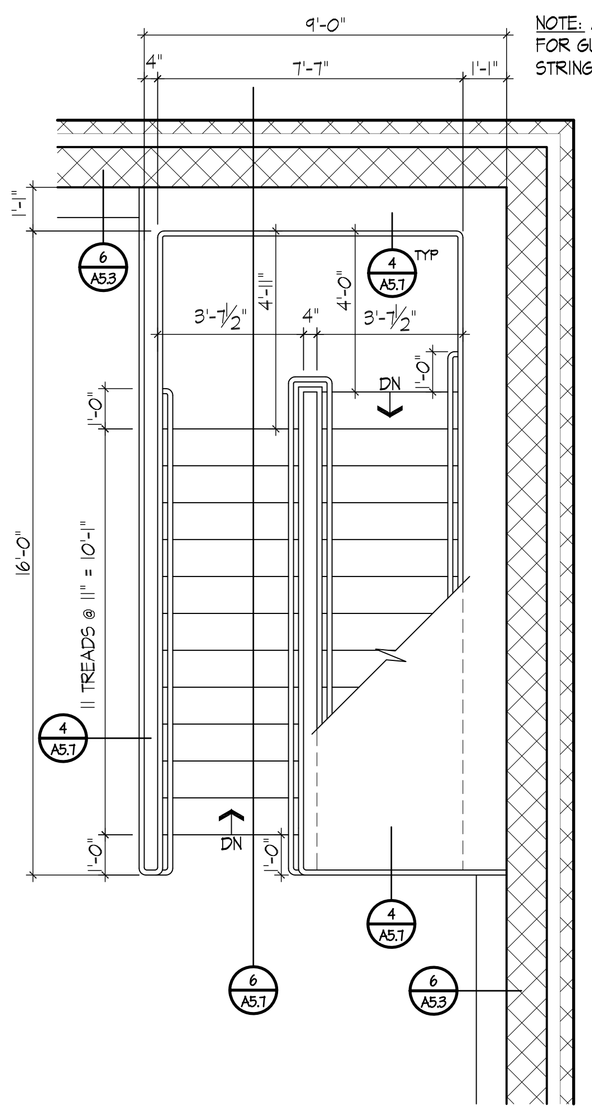

NOTE: ALL DIMENSIONS ARE TO GUARD RAILS - SEE DETAIL 4 A5.7 FOR GUARD RAIL LOCATION IN RELATION TO STEEL STRINGER/CHANNEL

3 A5.7 **ENLARGED DRAW TOWER LAB STAIR PLAN**
SCALE: 3/8" = 1'-0"

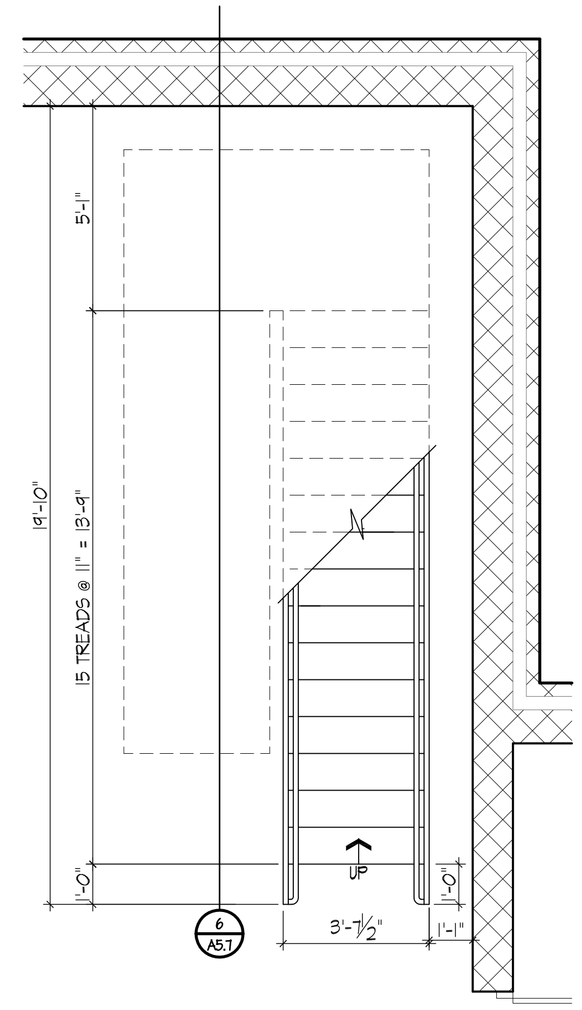

1 A5.7 **ENLARGED DRAW TOWER LAB STAIR PLAN**
SCALE: 3/8" = 1'-0"

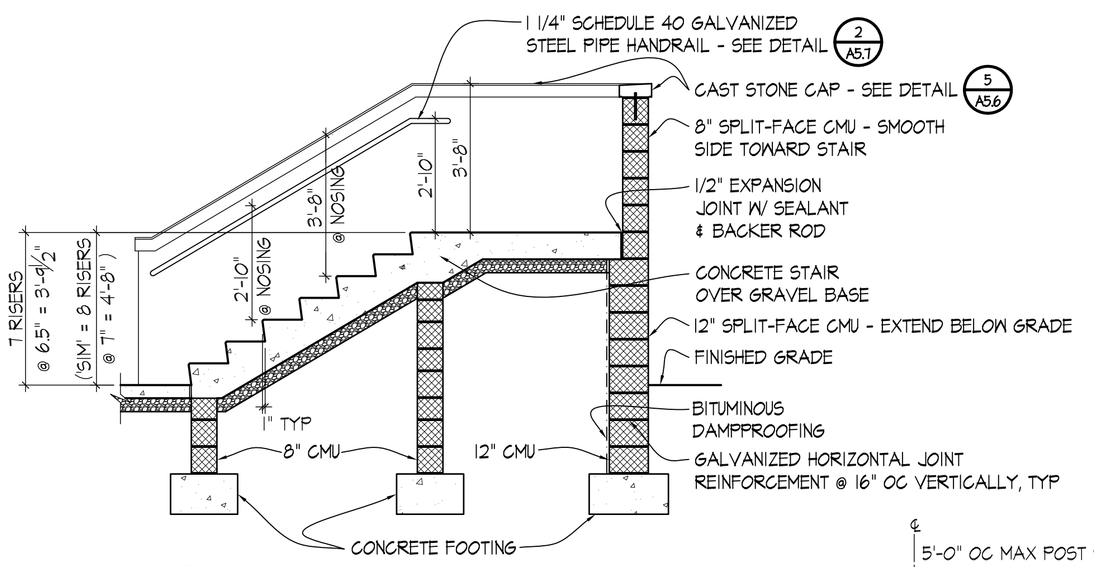

9 A5.7 **SOUTH STAIR SECTION (WEST STAIR 'SIM')**
SCALE: 3/8" = 1'-0"

GENERAL STAIR & RAILING NOTES:

1. ALL EXPOSED JOINTS SHALL BE CONTINUOUSLY WELDED AND GROUND SMOOTH, AND THE ENTIRE STEEL STAIRS, HANDRAIL AND GUARD RAIL ASSEMBLIES SHALL BE PAINTED.

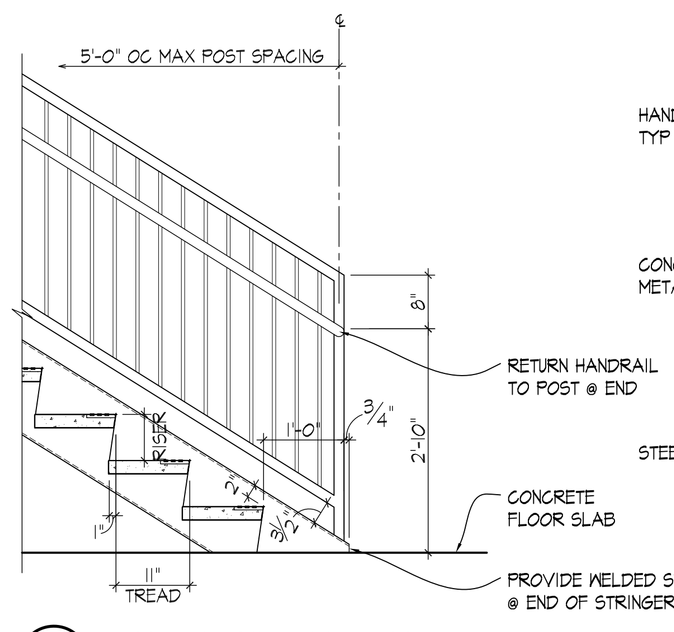

10 A5.7 **STAIR DETAIL @ FIRST FLOOR**
SCALE: 3/4" = 1'-0"

NOTE: REFER TO DETAIL 5 A5.7 FOR TYPICAL REQUIRED CONSTRUCTION, EXCEPT AS OTHERWISE NOTED

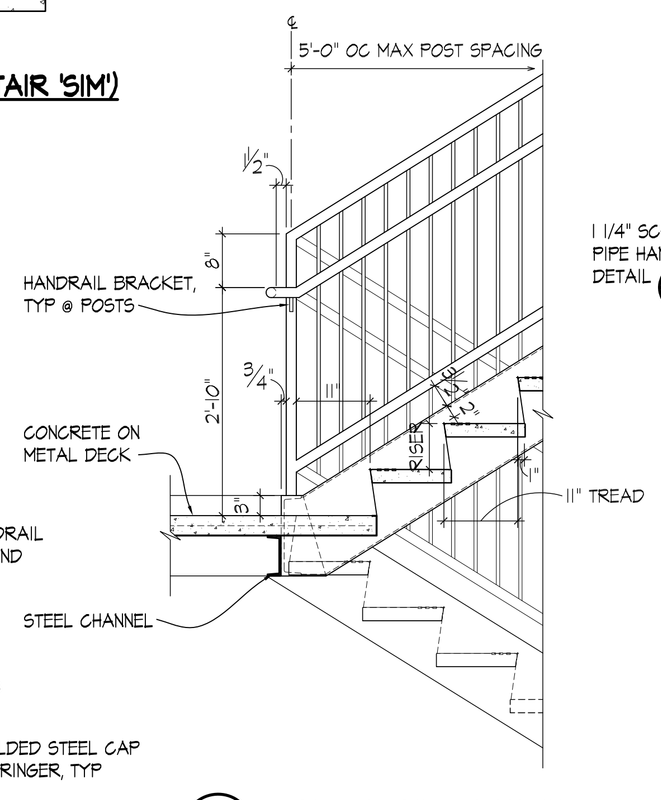

7 A5.7 **STAIR DETAIL @ LANDING**
SCALE: 3/4" = 1'-0"

NOTE: REFER TO DETAIL 5 A5.7 FOR TYPICAL REQUIRED CONSTRUCTION, EXCEPT AS OTHERWISE NOTED

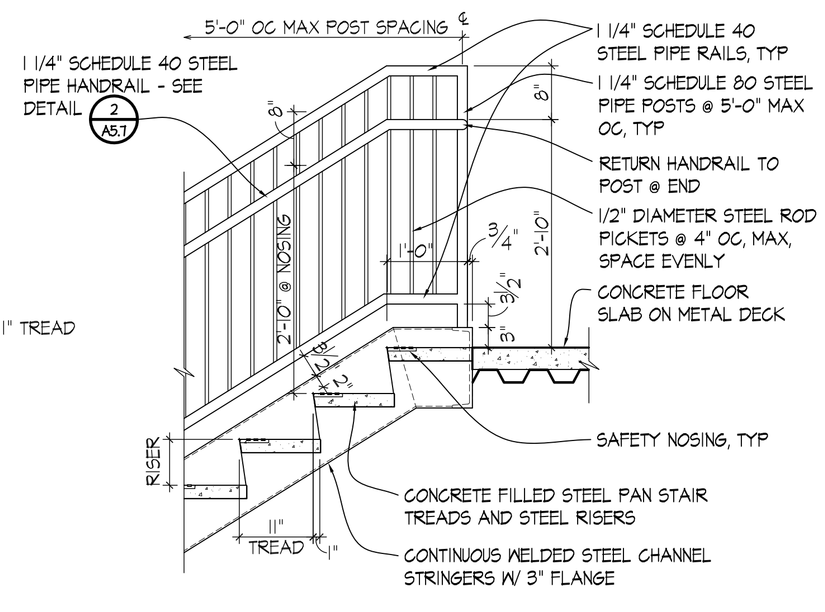

5 A5.7 **STAIR DETAIL @ SECOND FLOOR**
SCALE: 3/4" = 1'-0"

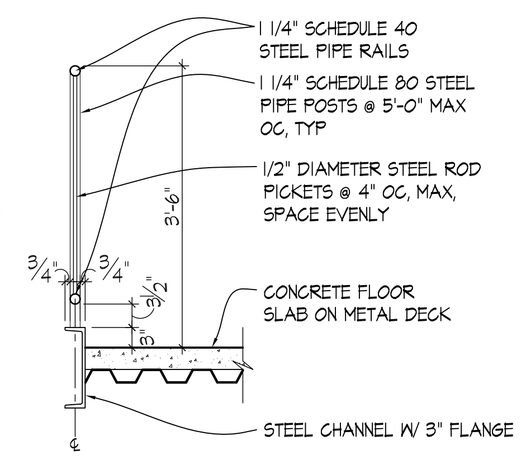

4 A5.7 **GUARD RAIL DETAIL**
SCALE: 3/4" = 1'-0"

NOTE: ALL HANDRAILS AND BRACKETS @ EXTERIOR SHALL BE GALVANIZED AND PAINTED

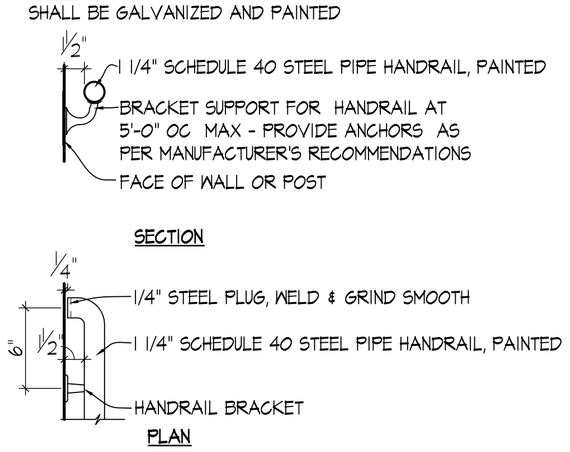

NOTE: WHEREVER HANDRAILS ARE LOCATED AT GUARD RAIL ASSEMBLIES RETURN THE END OF THE HANDRAIL TO A STEEL POST & PROVIDE WELDED CONNECTION

2 A5.7 **HANDRAIL DETAILS**
SCALE: 1-1/2" = 1'-0"

SCALE: 3/8" = 1'-0" (0, 1', 2', 4', 6', 8')
SCALE: 3/4" = 1'-0" (0, 6", 1', 2', 3', 4')
SCALE: 1-1/2" = 1'-0" (0, 2", 4", 8", 12", 2')

07/09/10
CAUTION: IF SHEET IS LESS THAN 36" X 24" USE GRAPHIC SCALE

SYM	DESCRIPTION	DATE	APPR

NAVFAC

MARSHALL CRAFT ASSOCIATES, INC.
Marshall Craft Associates, Inc.
Architecture / Interior Design / Planning
6112 York Road, Baltimore, Maryland 21212-2611
410.532.3131 Fax: 410.532.3206

AE LOGO

SEAL

DES | DRW
REVIEWED BY
PM/DM
CHIEF ENG/ARCH

DEPARTMENT OF THE NAVY — NAVFAC
NAVAL FACILITIES ENGINEERING COMMAND — WASHINGTON NAVY YARD, WASHINGTON D.C.
ROICC — NAVAL RESEARCH LABORATORY — DISTRICT OF COLUMBIA
RENOVATION OF BUILDING A69
WASHINGTON, D.C.
ENLARGED STAIR PLANS, SECTION AND DETAILS

CODE ID. NO. 80091 | SIZE D
SCALE: AS_SHOWN
MAXIMO NO. JPXMY
STA. PROJ. NO. 855305
WORK ORDER NO. 0010
CONSTR. CONTR. NO.
NAVFAC DRAWING NO. 13022528
SHEET 28 OF 93
A5.7

DRAWFORM REVISION: 01 MAY 2006

REV/DATE: FILE NAME: J:\09014.09\drawings\A40-Construction Docs 100%\A5.7.dwg LAYOUT NAME: A5.7 PLOTTED: Wednesday, July 07, 2010 - 11:53am

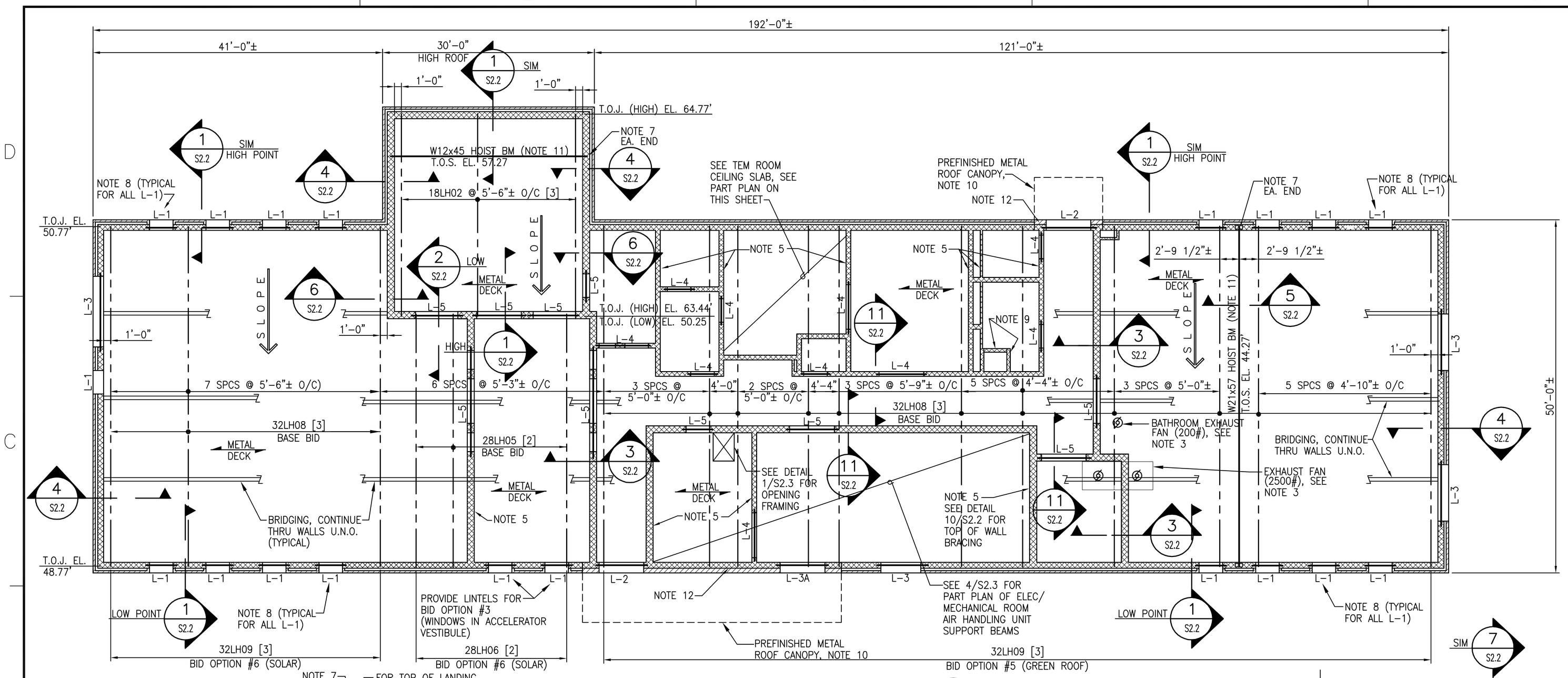

ROOF FRAMING PLAN

SCALE: 1/8"=1'-0"

PLAN NOTES:

1. PROVIDE 1 1/2" x 20 GAGE GALVANIZED METAL DECKING OVER ENTIRE ROOF.
2. TOP OF STEEL JOIST ELEVATION NOTED THUS; T.O.J. EL. XX.XX'. TOP OF JOIST IS DEFINED AS BOTTOM OF METAL DECKING. TOP OF STEEL ELEVATION NOTED THUS; T.O.S. EL. XX.XX'.
3. SEE MECHANICAL AND ELECTRICAL DRAWINGS FOR SIZE AND LOCATION OF EQUIPMENT AND OPENINGS NOT SHOWN. SEE DETAIL 1/S2.3 FOR TYPICAL OPENING FRAMING.
4. [X] INDICATES MINIMUM NUMBER OF ROWS OF BRIDGING FOR JOIST. IN ADDITION TO THE MINIMUM NUMBER OF ROWS OF BRIDGING, PROVIDE ONE ROW OF BRIDGING EACH END OF JOIST AT FIRST PANEL POINT, TYPICAL ALL ROOF JOIST. NO DIAGONAL BRIDGING.
5. ALL MASONRY WALLS EXTEND TO UNDERSIDE OF ROOF UNLESS SHOWN OR OTHERWISE NOTED ON THE ARCHITECTURAL DRAWINGS. SEE DETAILS 10 & 11 ON SHT. S2.2 FOR TYPICAL MASONRY WALL BRACING.
6. ⟷ INDICATES SPAN DIRECTION OF METAL DECK.
7. POCKET WALL AND PROVIDE BASE PLATE PER DETAIL 2/S2.3.
8. PROVIDE LINTEL L-1A IN LIEU OF L-1 FOR BID OPTION #4 (LIGHT BLOCKING WINDOW SHADES).
9. PROVIDE L5x5x3/8 (VERTICAL LEG ON SHOWER SIDE) FOR MASONRY WALL ABOVE. PROVIDE EAST CLOSURE WALL FOR SHOWER. BID OPTION #2.
10. PROVIDE PREFINISHED METAL CANOPY SIGNED AND SEALED SHOP DRAWINGS FOR APPROVAL.
11. HOIST BEAM CAPACITY: 6 KIP CONCENTRATED LOAD AT MIDSPAN (W12) & 6 KIP AT THIRD POINTS (W21). PROVIDE HOIST RINGS WELDED TO BEAM BOTTOM FLANGE AT LOAD POINTS. CONTRACTING OFFICER TO REVIEW AND APPROVE HOIST RINGS.
12. PROVIDE CONTINUOUS 7"x7"x3/8" BENT PLATE AT CANOPY. ANCHOR BENT PLATE TO CMU WITH 5/8" STAINLESS STEEL EXP. ANCHORS @24" O.C.

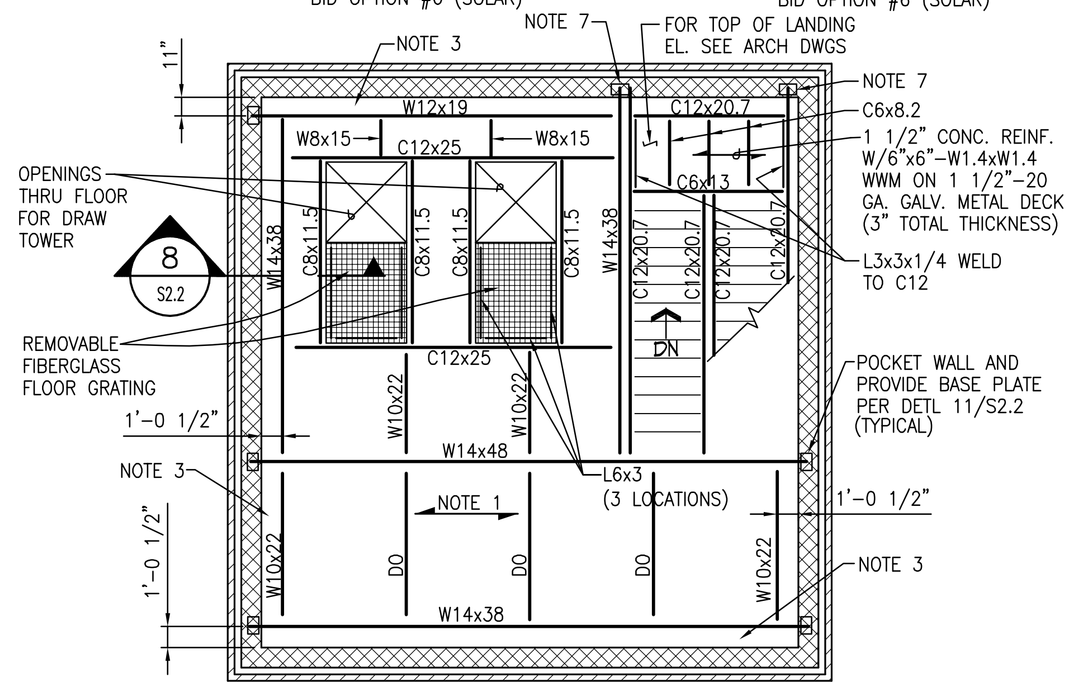

SECOND FLOOR FRAMING PLAN

SCALE: 3/16"=1'-0"

PLAN NOTES:

1. 3 1/4" NORMAL WEIGHT CONCRETE ON 2"-20 GA. COMPOSITE METAL DECK (5 1/4" TOTAL THICKNESS) W/ 6"x6"-W1.4xW1.4 WWM.
2. TOP OF SECOND FLOOR EL. 44.27' & TOP OF SECOND FLOOR STEEL EL. 43.83'
3. PROVIDE 9" CLEAR FROM FACE OF WALL TO EDGE OF SLAB.

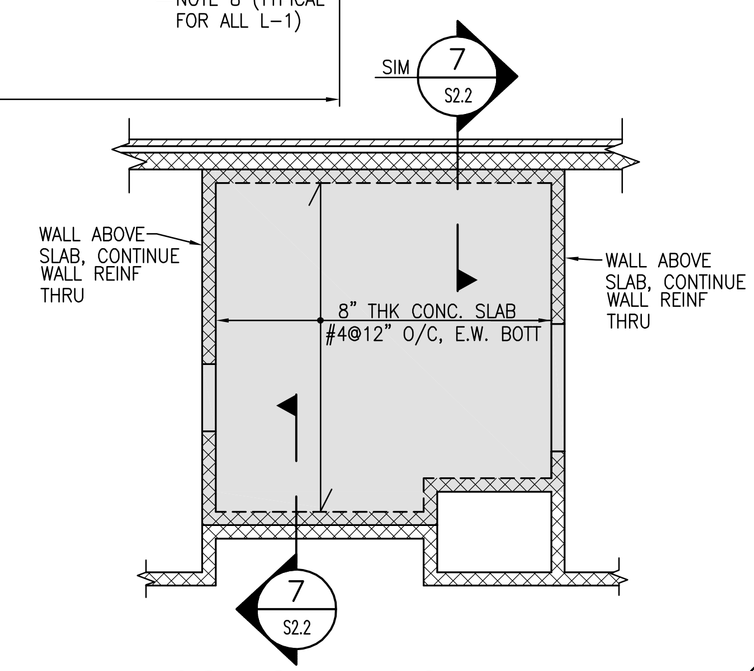

TEM ROOM CEILING SLAB PART PLAN

SCALE: 3/16"=1'-0"

PLAN NOTES:

1. EXTENT OF 8" CEILING SLAB SHOWN ▭.
2. TOP OF CEILING SLAB ELEV. 42.94.

1/8"=1'-0" 0 4 6 8 12 16 24

3/16"=1'-0" 0 1 5 10 15

07/09/10

CAUTION: IF SHEET IS LESS THAN 36" X 24" USE GRAPHIC SCALE

APPR	DATE	DESCRIPTION	STM

NAVFAC

MCA MARSHALL CRAFT ASSOCIATES

Marshall Craft Associates, Inc.
Architecture | Interior Design | Planning
6132 York Road, Baltimore, Maryland 21212-2011
410.532.3111 Fax: 410.532.3205

WHITNEY BAILEY COX & MAGNANI, LLC
949 Fairmount Ave., Suite 100 Baltimore, MD 21286
Tel. 410-823-4000 Fax. 410-823-4005

WBCM ARCHITECTURE ENGINEERING CONSTRUCTION

AE LOGO

SEAL

DES | DRW
REVIEWED BY
PM/DM
CHIEF ENG/ARCH

NAVFAC
DEPARTMENT OF THE NAVY
NAVAL FACILITIES ENGINEERING COMMAND
WASHINGTON NAVY YARD, WASHINGTON D.C.
ROICC
NAVAL RESEARCH LABORATORY
DISTRICT OF COLUMBIA
RENOVATION OF BUILDING A69
WASHINGTON, D.C.
SECOND FLOOR & ROOF FRAMING PLAN

CODE ID. NO. 80091 | SIZE D
SCALE:
MAXIMO NO. JPXMY
STA. PROJ. NO. 855305
WORK ORDER NO. 0010
CONSTR. CONTR. NO.
NAVFAC DRAWING NO. 13022535
SHEET 35 OF 93

S1.1

DRAWFORM REVISION: 01 MAY 2006

REVDATE: FILE NAME: P:\2009\09001507\Drawings\03-Struct\S1.1.dwg LAYOUT NAME: S1.1 PLOTTED: Friday, July 02, 2010 - 4:02pm

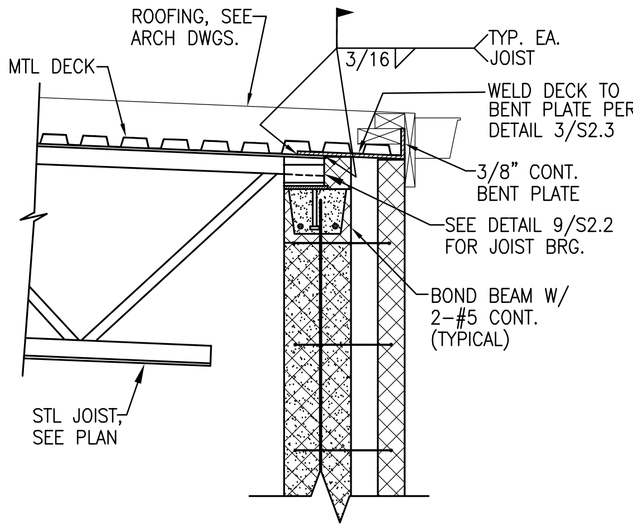

NOTE: SECTION NOTED SIM IS AT HIGH POINT.

1 SIM / S2.2 — 1 / S2.2 SECTION
SCALE: 3/4"=1'-0"

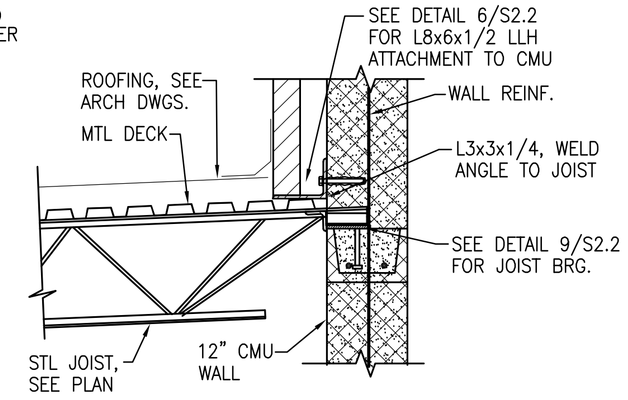

2 / S2.2 SECTION
SCALE: 3/4"=1'-0"

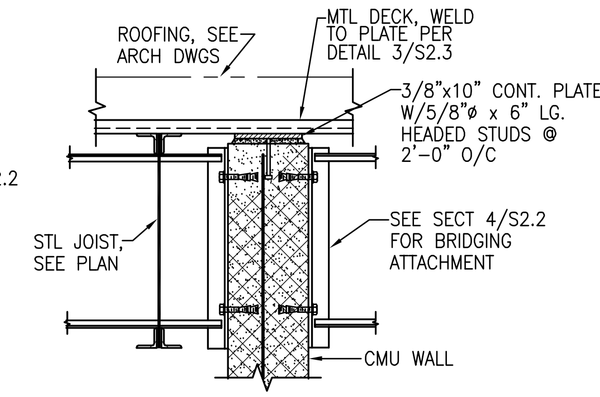

3 / S2.2 SECTION
SCALE: 3/4"=1'-0"

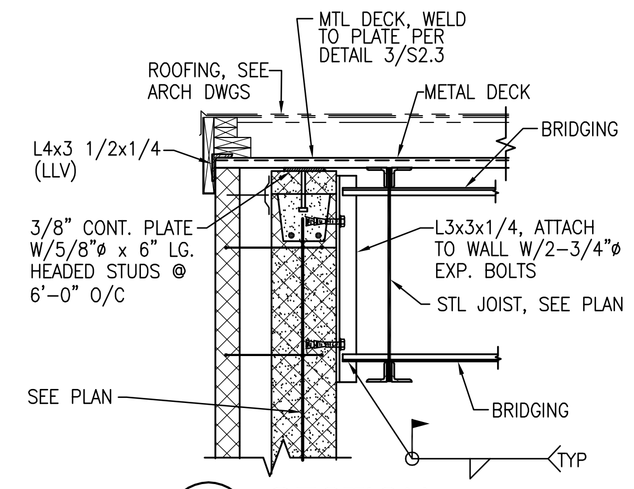

4 / S2.2 SECTION
SCALE: 3/4"=1'-0"

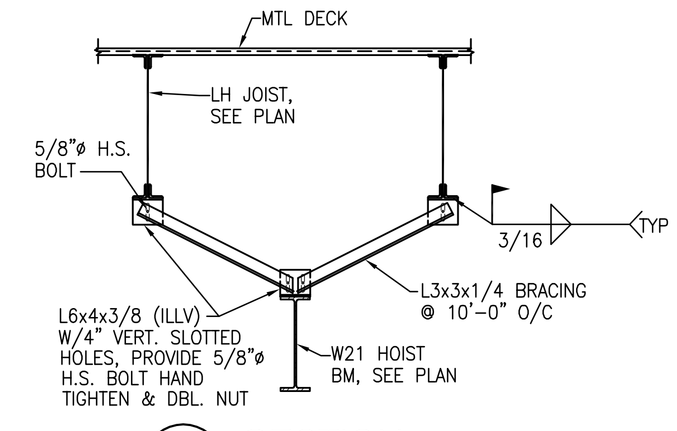

5 / S2.2 SECTION
SCALE: 1/2"=1'-0"

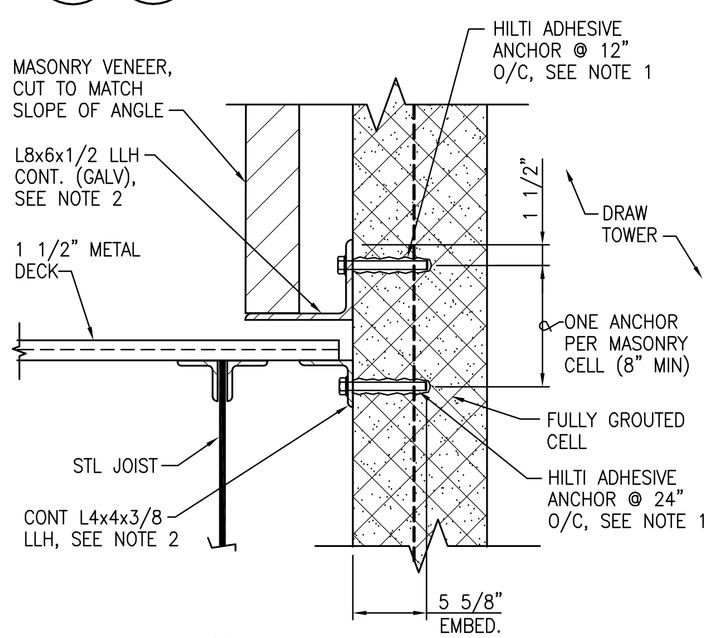

6 / S2.2 SECTION
1 1/2"=1'-0"

NOTES:

1. PROVIDE HILTI HIT HY 150 MAX. WITH 5/8"ø HAS THREADED ROD. STAINLESS STEEL ROD FOR L8x6 AND STANDARD CARBON STEEL ROD FOR L4x4.
2. SLOPE STEEL ANGLE TO MATCH ROOF SLOPE.

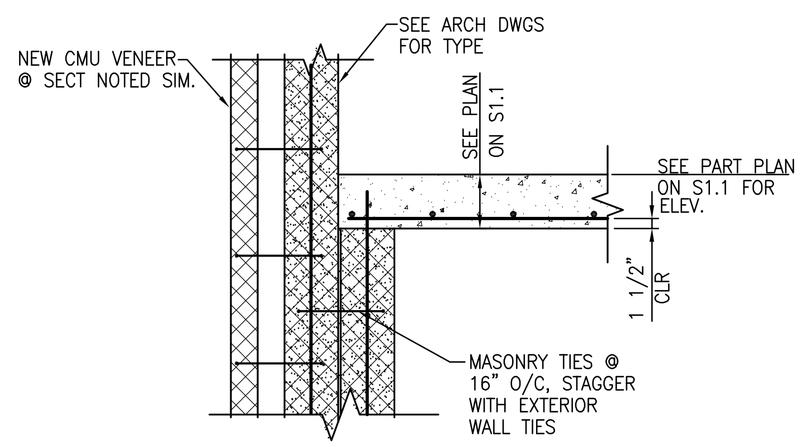

7 SIM / S2.2 — 7 / S2.2 SECTION
3/4"=1'-0"

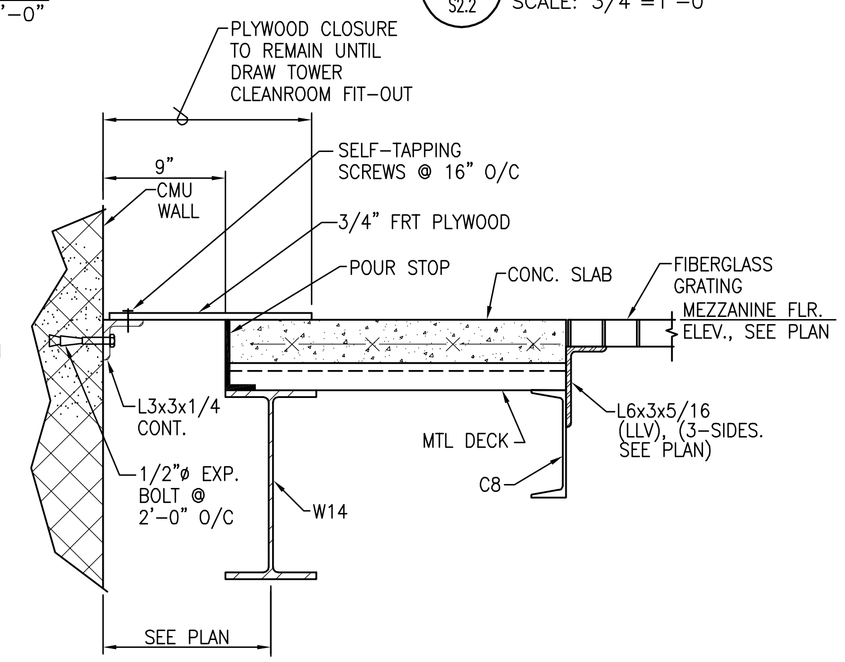

8 / S2.2 SECTION
1 1/2"=1'-0"

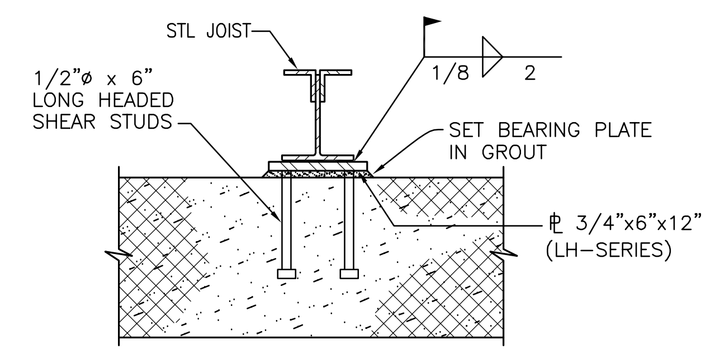

NOTE: BEAR PLATE ON BOND BEAM

TYPICAL JOIST BEARING AT MASONRY WALLS

9 / S2.2 DETAIL
SCALE: NOT TO SCALE

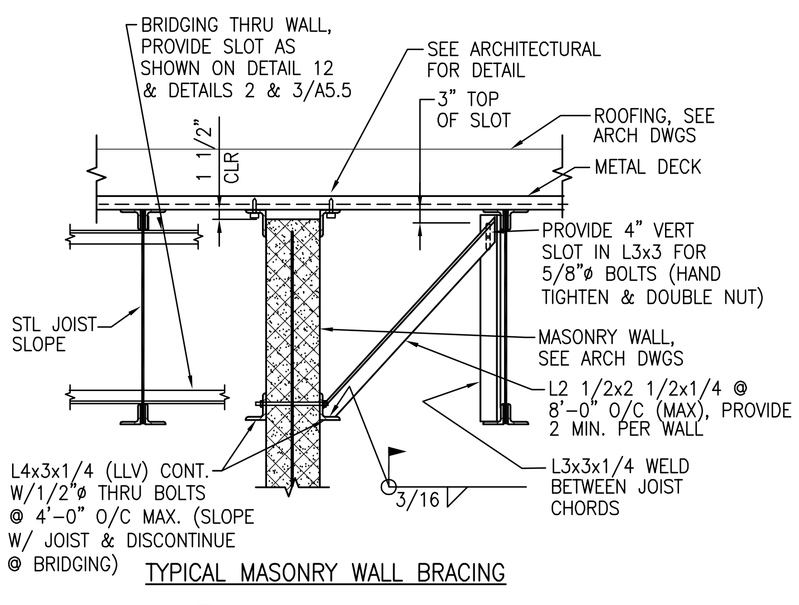

TYPICAL MASONRY WALL BRACING

10 / S2.2 DETAIL
SCALE: NOT TO SCALE

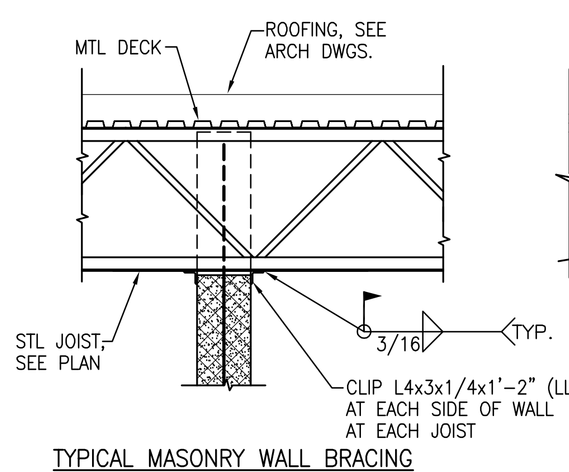

TYPICAL MASONRY WALL BRACING

11 / S2.2 SECTION
SCALE: 1/2"=1'-0"

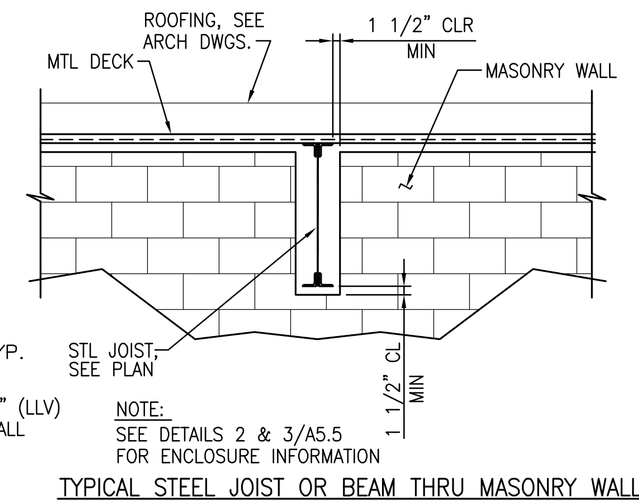

NOTE:
SEE DETAILS 2 & 3/A5.5 FOR ENCLOSURE INFORMATION

TYPICAL STEEL JOIST OR BEAM THRU MASONRY WALL

12 / S2.2 DETAIL
SCALE: 1/2"=1'-0"

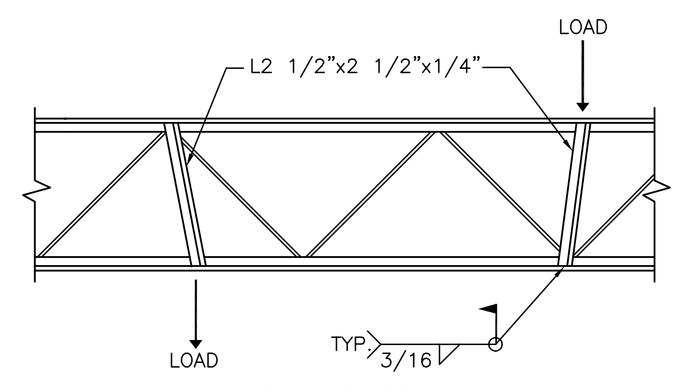

WHERE LOADS ARE APPLIED TO JOIST BETWEEN PANEL POINTS, REINFORCE AS SHOWN. LOADS INCLUDE BUT ARE NOT LIMITED TO MECHANICAL EQUIPMENT AND PIPES. LOADS GREATER THAN 300# AND SUPPORTED BY JOISTS MUST BE SUBMITTED FOR REVIEW BY ENGINEER OF RECORD.

TYPICAL JOIST REINFORCEMENT

13 / S2.2 DETAIL
NOT TO SCALE

1/2"=1'-0" (0 1 2 4 8)
3/4"=1'-0" (0 1 2 3 4)
1 1/2"=1'-0" (0 0.5 1 2)

07/09/10

CAUTION: IF SHEET IS LESS THAN 36" X 24" USE GRAPHIC SCALE

REV	DATE	DESCRIPTION	STM

NAVFAC

MARSHALL CRAFT ASSOCIATES, INC.
Marshall Craft Associates, Inc.
Architecture | Interior Design | Planning
6127 York Road, Baltimore, Maryland 21210-2511
410.532.3101 Fax: 410.532.3205

WHITNEY BAILEY COX & MAGNANI, LLC
949 Fairmount Ave., Suite 100 Baltimore, MD 21286
Tel. 410-823-4000 Fax. 410-296-8705

WBCM
ARCHITECTURE ENGINEERING CONSTRUCTION

AE LOGO

SEAL

DES | DRW
REVIEWED BY
PM/DM
CHIEF ENG/ARCH

NAVFAC
DEPARTMENT OF THE NAVY
NAVAL FACILITIES ENGINEERING COMMAND
WASHINGTON NAVY YARD, WASHINGTON D.C.
ROICC
NAVAL RESEARCH LABORATORY
DISTRICT OF COLUMBIA

RENOVATION OF BUILDING A69
WASHINGTON, D.C.

SECTIONS & DETAILS

CODE ID. NO. 80091 | SIZE D
SCALE:
MAXIMO NO. JPXMY
STA. PROJ. NO. 855305
WORK ORDER NO. 0010
CONSTR. CONTR. NO.
NAVFAC DRAWING NO. 13022538
SHEET 38 OF 93

S2.2

DRAWFORM REVISION: 01 MAY 2006

REV/DATE: FILE NAME: P:\2009\09001507\Drawings\03-Struct\S2.2.dwg LAYOUT NAME: S2.2 PLOTTED: Friday, July 02, 2010 - 4:10pm

1. CODE

ALL CONSTRUCTION SHALL CONFORM WITH:

A. A-E GUIDE PROVIDED BY NAVFAC WASHINGTON
B. UNITED FACILITY CRITERIA (UFC) 1-200-01
C. THE 2006 INTERNATIONAL BUILDING CODE (IBC)
D. ANTI-TERRORISM REQUIREMENTS IN UFC 4-010-01 & 4-010-02

2. DESIGN LOADING

A. DESIGN DEAD LOADS:

ROOF

ROOFING	6 PSF
EXPANDING PERLITE INSTALLATION	1 PSF
RIGID INSULATION	8 PSF
METAL DECK	2 PSF
LONG SPAN JOIST	3 PSF
MECHANICAL	5 PSF
ELECTRICAL	5 PSF
TOTAL DEAD LOAD	30 PSF
BID OPTIONS	ADDITIONAL DEAD LOAD
VEGETATIVE ROOF (GREEN ROOF)	25 PSF
PHOTOVOLTAIC SOLAR PANELS	15 PSF

MECH ROOM ELEVATED PLATFORM

GRATING	10 PSF
STEEL FRAMING	5 PSF
TOTAL DEAD LOAD	15 PSF

DRAW TOWER SECOND FLOOR

CONCRETE AND METAL DECK	51 PSF
STEEL FRAMING	4 PSF
TOTAL DEAD LOAD	55 PSF

B. DESIGN LIVE LOADS:

LABORATORIES	125 PSF
MECH. ROOM ELEVATED PLATFORMS	60 PSF
ORDINARY, PITCHED ROOFS	20 PSF
MECHANICAL ROOMS	125 PSF
DRAW TOWER SECOND FLOOR	60 PSF

C. SNOW LOAD:

GROUND SNOW LOAD, Pg =	25 PSF
FLAT ROOF SNOW LOAD, Pf =	18 PSF

D. WIND DESIGN DATA:

BASIC WIND SPEED, V = 90 MPH
OCCUPANCY CATEGORY II
IMPORTANCE FACTOR, I = 1.0
EXPOSURE C

E. EARTHQUAKE DESIGN DATA:

MAPPED SPECTRAL RESPONSE ACCELERATIONS
S_s=0.152
S_1=0.050
SITE CLASS D
SPECTRAL RESPONSE COEFFICIENTS
S_{DS} =0.162
S_{D1} =0.080
SEISMIC DESIGN CATEGORY B
SEISMIC FORCE RESISTANT SYSTEM:
REINFORCED MASONRY SHEAR WALLS
DESIGN BASE SHEAR, V = 23k

F. ALL STRUCTURAL COMPONENTS HAVE BEEN DESIGNED FOR THE DEAD LOADS SHOWN ON THE PLANS AND THE LIVE LOADS SHOWN ABOVE. IT IS THE CONTRACTOR'S RESPONSIBILITY TO DETERMINE ALLOWABLE CONSTRUCTION LOADS AND TO PROVIDE PROPER DESIGN AND CONSTRUCTION OF THOSE ITEMS NECESSARY TO FACILITATE CONSTRUCTION INCLUDING BUT NOT LIMITED TO FALSEWORK, FORMWORK, STAGING, BRACING, SHEETING AND SHORING, ETC.

G. THE STRUCTURE HAS BEEN DESIGNED FOR THE DEAD AND LIVE LOADS INDICATED ABOVE. ANY INCREASE OF LOADS DUE TO CHANGE IN USAGE OR CONSTRUCTION MATERIALS, ETC. SHALL HAVE THE WRITTEN APPROVAL OF THE ENGINEER.

H. THE STABILITY OF THE STRUCTURE IS DEPENDENT UPON THE DIAPHRAGM ACTION OF THE ROOF. THE CONTRACTOR IS RESPONSIBLE FOR THE METHODS OF CONSTRUCTIONS AND SHALL PROVIDE ALL GUYS BRACING AND SHORING REQUIRED TO ACCOMMODATE ALL INTERIM LOADING CONDITIONS THROUGHOUT THE CONSTRUCTION PHASE.

J. WEIGHT OF EQUIPMENT SHOWN ON THE STRUCTURAL DRAWINGS HAVE BEEN CONSIDERED IN THE DESIGN OF THE FRAMING. ANY ADDITIONAL ADDITIONAL EQUIPMENT NOT SHOWN ON THE STRUCTURAL DRAWINGS AND EXCEEDING 300 POUNDS SHALL BE BROUGHT TO THE ATTENTION OF THE ENGINEER FOR APPROVAL PRIOR TO INSTALLATION.

3. GENERAL

A. THE CONTRACTOR SHALL FIELD CHECK AND VERIFY ALL DIMENSIONS AND ELEVATIONS OF EXISTING WORK PRIOR TO FABRICATION OF ANY NEW MATERIALS. ALL MATERIALS SHALL BE BROUGHT ATTENTION TO THE ARCHITECT.

B. THE CONTRACTOR IS ADVISED THAT ALL PLANS, DIMENSIONS, AND DETAILS DEPICT FIELD CONDITION AS SHOWN. MINOR VARIATIONS ARE TO BE EXPECTED AND ANY DEVIATIONS FROM THE CONTRACT DOCUMENTS SHALL BE APPROVED PRIOR TO PROCEEDING.

C. IT SHALL BE THE CONTRACTOR'S RESPONSIBILITY TO EXAMINE THE EXISTING BUILDING DURING THE COURSE OF CONSTRUCTION AND IMMEDIATELY ADVISE THE ARCHITECT OF ANY AREAS WHERE THE STRUCTURE EXHIBITS DISTRESS OR FAILURE.

D. IT IS THE CONTRACTOR'S RESPONSIBILITY TO SATISFY HIMSELF AS TO THE LOCATION OF ANY UTILITIES IN THE IMMEDIATE VICINITY OF CONSTRUCTION SO AS TO PREVENT DAMAGE TO THEM. SHOULD ANY DAMAGE TO SUCH UTILITIES OCCUR THE CONTRACTOR SHALL BE REQUIRED TO REPAIR SUCH DAMAGE AT HIS OWN EXPENSE AND TO THE SATISFACTION OF THE OWNER.

E. THE CONTRACTOR SHALL EXERCISE CARE DURING CONSTRUCTION AS REQUIRED TO MAINTAIN THE STABILITY OF EXISTING CONSTRUCTION. EXISTING WALLS ARE DEPENDENT UPON THE EXISTING FLOORS AND ROOFS FOR STABILITY.

F. LOADS GREATER THAN THE DESIGN LIVE LOADS SHALL NOT BE PLACED ON THE STRUCTURE. A CONCRETE STRUCTURE MAY NOT SUPPORT ITS DESIGN LIVE LOAD FOR 28 DAYS. CONTRACTOR SHALL SUPPORT ADJACENT STRUCTURES, UTILITIES AND EXCAVATIONS AS REQUIRED. CONTRACTOR SHALL SUBMIT SHOP DRAWINGS FOR ALL TEMPORARY FORMWORK, SHEETING, SHORING AND UNDERPINNING SEALED BY A PROFESSIONAL ENGINEER AS A PART OF THE CONTRACTOR'S WORK.

G. THE CONTRACTOR SHALL PROVIDE ALL SHORING, NEEDLING AND BRACING AS REQUIRED TO SUPPORT THE EXISTING STRUCTURE. THE CONTRACTOR SHALL EXAMINE THE EXISTING STRUCTURE TO DETERMINE THE EXTENT OF NECESSARY SHORING, NEEDLING AND UNDERPINNING. THE CAPACITY AND METHOD USED FOR SHORING AND NEEDLING SHALL BE THE RESPONSIBILITY OF THE CONTRACTOR.

H. CONSULT THE ARCHITECTURAL, MECHANICAL AND ELECTRICAL DRAWINGS FOR VERIFICATION OF LOCATION AND DIMENSION OF CHASES, INSERTS, OPENINGS, SLEEVES, WASHERS, DRIPS, REVEALS, DEPRESSIONS AND OTHER PROJECT REQUIREMENTS.

J. THE BUILDING FRAME IS NOT SELF-SUPPORTING UNTIL ALL CONNECTIONS HAVE BEEN MADE, ALL DIAPHRAGMS INSTALLED AND THE LATERAL LOAD RESISTING SYSTEM COMPLETELY CONSTRUCTED AND TIED TOGETHER INCLUDING ALL FOUNDATIONS, ALL FLOOR SYSTEMS, ALL ROOF SYSTEMS, ALL DIAGONAL BRACING SYSTEMS, ALL WALLS, AND ALL ASSOCIATED CONSTRUCTION. THE CONTRACTOR IS RESPONSIBLE FOR THE METHODS OF CONSTRUCTION AND SHALL PROVIDE ALL GUYS, BRACING AND SHORING REQUIRED TO ACCOMMODATE ALL INTERIM LOADING CONDITIONS THROUGHOUT THE CONSTRUCTION PHASE.

K. DO NOT BACKFILL AGAINST RETAINING WALLS UNTIL CONCRETE HAS ATTAINED REQUIRED STRENGTH.

L. ALL WORK SPECIFIED HEREIN SHALL BE INSPECTED IN ACCORDANCE WITH THE SPECIFICATIONS. THE CONTRACTOR (SEE SPECIFICATIONS) SHALL HIRE AN EXPERIENCED, QUALIFIED INSPECTOR TO PERFORM ALL THE REQUIRED INSPECTION WORK. THE ENGINEER WILL NOT PERFORM THE REQUIRED INSPECTION AS A PART OF THEIR DESIGN SERVICES. THE ENGINEER MAY VISIT THE SITE TO ASCERTAIN GENERAL CONFORMANCE WITH THE CONTRACT DOCUMENTS. SUCH SITE VISITS ARE NOT TO BE CONSTRUED AS MEETING ANY INSPECTION REQUIREMENTS UNLESS THE ENGINEER SPECIFICALLY SO STATES IN WRITING.

M. ALL RAILINGS AND PRE-FINISHED METAL ROOF CANOPIES AND STOREFRONTS SHALL BE DESIGNED FOR ALL APPLICABLE DEAD LOADS AND FOR ALL LIVE, WIND, AND SEISMIC LOADS AS SPECIFIED IN THE BUILDING CODE. SHOP DRAWINGS AND CALCULATIONS FOR THESE ITEMS SHALL BE SIGNED AND SEALED A LICENSED STRUCTURAL ENGINEER AND SHALL BE SUBMITTED TO THE ARCHITECT.

N. ANY REVIEW OF STRUCTURAL ITEM SHOP DRAWINGS BY THE STRUCTURAL ENGINEER IS FOR GENERAL CONFORMANCE WITH THE DESIGN CONCEPT AS PRESENTED BY THE CONTRACT DOCUMENTS. NO DETAILED CHECK OF QUANTITIES OR DIMENSIONS WILL BE MADE.

P. AT THE TIME OF SHOP DRAWING SUBMISSION, THE CONTRACTOR SHALL STATE IN WRITING ANY DEVIATION OR OMISSIONS FROM THE CONTRACT DOCUMENTS. THE CONTRACTOR SHALL REVIEW ALL SHOP DRAWINGS BEFORE SUBMISSION AND MAKE ALL NECESSARY CHANGES

Q. SUBMIT SHOP DRAWINGS FOR SPECIFIC AREAS IN THEIR ENTIRETY.

R. ALL CHANGES AND ADDITIONS MADE ON RE-SUBMITTALS MUST BE CLEARLY FLAGGED AND NOTED. THE PURPOSE OF THE RE-SUBMITTALS MUST BE CLEARLY NOTED ON THE LETTER OF TRANSMITTAL. THE REVIEW OF THE RE-SUBMITTALS WILL BE LIMITED TO THOSE ITEMS CAUSING THE RE-SUBMISSION.

S. THE STRUCTURAL CONTRACT DOCUMENTS ARE NOT TO BE REPRODUCED FOR USE AS SHOP DRAWINGS.

T. SHOP DRAWINGS FOR ALL STRUCTURAL ELEMENTS SHOWN ON THE CONTRACT DOCUMENTS MUST BE SUBMITTED BY THE CONTRACTOR. IF A CONTRACTOR OR OWNER FAILS TO SUBMIT THE SHOP DRAWINGS, THE ENGINEER WILL NOT BE RESPONSIBLE FOR THE STRUCTURAL CERTIFICATION OR FOR THE DESIGN OF THE PROJECT.

4. FOUNDATIONS

4A. FOOTINGS & FLOOR SLABS

A. ALL NEW FOOTINGS HAVE BEEN DESIGNED FOR AN ALLOWABLE SOIL BEARING CAPACITY OF 2500 PSF.

B. ALL EXCAVATION, BACKFILLING, AND FILLING OPERATIONS BENEATH THE BUILDING SLAB AND FOUNDATIONS, AND ALL COMPACTION TESTS AND INSPECTION, SHALL BE DONE UNDER THE DIRECTION AND SUPERVISION OF A REGISTERED PROFESSIONAL SOILS ENGINEER RETAINED BY THE CONTRACTOR. ALL SOIL, EQUIPMENT AND PROCEDURES SHALL BE APPROVED BY THE SOILS ENGINEER PRIOR TO ALL EARTHWORK OPERATIONS.

C. FINAL BEARING SURFACES SHOULD BE OBSERVED BY A SOILS ENGINEER TO ASCERTAIN FOUNDATIONS AND SLAB ARE PLACED ON SUITABLE BEARING MATERIAL. PROVIDE STRUCTURAL FILL UNDER NEW FOOTINGS AND WHEN EXISTING SUBGRADE DEEMED UNSUITABLE FOR SLAB.

4B. CONTROLLED STRUCTURAL FILL

A. FLOOR AND FILL SUBGRADES SHALL BE STRIPPED OF ASPHALT, CONCRETE, TOPSOIL, AND UNSUITABLE SOFT SURFACE SOILS. SOILS OBSERVED TO CONTAIN ORGANIC MATERIAL OR RUBBLE, OR CANNOT OTHERWISE BE SUITABLY COMPACTED SHOULD BE REPLACED WITH NEW STRUCTURAL FILL.

B. STRUCTURAL FILL SHOULD BE FREE OF ORGANICS, ROOTS, DEBRIS, AND ROCK LARGER THAN 4 INCHES IN DIAMETER AND VERIFIED SUITABLE BY A SOILS ENGINEER DURING CONSTRUCTION.

C. ALL COMPACTED STRUCTURAL FILL FOR FOOTING AND FLOOR SLAB SUPPORT SHOULD CONSIST OF MATERIAL MEETING THE SOIL CLASSIFICATIONS LISTED IN GEOTECHNICAL REPORT.

D. FILL SHOULD BE PLACED IN LOOSE, LEVEL LIFTS NOT EXCEEDING 8 INCHES IN THICKNESS AND COMPACTED TO A DRY DENSITY STATED IN GEOTECHNICAL REPORT. FOR FILLS PLACED WITH HAND TAMPERS, LIFTS SLOULD NOT EXCEED 4 INCHES.

5. CAST-IN-PLACE CONCRETE

5A. GENERAL CONSTRUCTION

A. ALL CONCRETE WORK SHALL CONFORM TO THE LATEST APPROVED EDITIONS OF THE FOLLOWING A.C.I. AND A.S.T.M. DOCUMENTS:

ACI-301	SPECIFICATIONS FOR STRUCTURAL CONCRETE FOR BUILDINGS
ACI-302,1R	FLOOR AND SLAB CONSTRUCTION
ACI-318	BUILDING CODE REQUIREMENTS FOR REINFORCED CONCRETE
ACI-214	COMPRESSION TESTS
ACI-306	COLD WEATHER
ACI-315	DETAILING
ACI-347	FORMWORK
ACI-305	HOT WEATHER
ACI-211	PROPORTIONS OF CONCRETE
ACI-304	PLACING CONCRETE
ASTM C94	READY-MIX CONCRETE

B. ALL FIELD AND LAB TESTING OF CONCRETE SHALL CONFORM TO THE LATEST APPROVED (BY LOCAL GOVERNMENT) EDITIONS OF ASTM:

ASTM C31	FIELD CYLINDER SPECIMENS
ASTM C143	SLUMP TEST
ASTM C231	AIR CONTENT (WHEN REQUIRED)
ASTM C39	LAB TESTING CYLINDERS
ASTM C172	SAMPLING FRESH CONCRETE
ASTM C42	HARDENED CORES (WHEN REQUIRED)

UPON COMPLETION OF CONCRETE TESTING, THE AGENCY SHALL CERTIFY THEIR RESULTS.

C. ALL CONCRETE, UNLESS NOTED OTHERWISE, SHALL BE STONE AGGREGATE CONCRETE HAVING THE FOLLOWING MINIMUM 28 DAY COMPRESSIVE STRENGTHS:

FOOTINGS AND FOUNDATIONS WALLS	- 4000 PSI
SLABS ON GRADE	- 3500 PSI

THE CONTRACTOR IS CAUTIONED THAT THE SCHEDULED CONSTRUCTION SEQUENCE FOR THE CONCRETE WORK MAY REQUIRE HIGHER CONCRETE STRENGTHS FOR SUPPORT OF CONSTRUCTION LOADINGS. CONCRETE MEMBERS CANNOT CARRY THEIR DESIGN LOADING UNTIL THE SPECIFIED 28-DAY COMPRESSIVE STRENGTHS ARE OBTAINED. CONTRACTOR SHALL INCREASE CONCRETE STRENGTHS AS REQUIRED.

D. ALL CONCRETE EXPOSED TO WEATHER SHALL HAVE AN AIR ENTRAINMENT OF 5%±1%. NO ADMIXTURES CONTAINING CALCIUM CHLORIDE SHALL BE PERMITTED. MAXIMUM AGGREGATE SIZE FOR CONCRETE SHALL BE 1", AND MAXIMUM SLUMP SHALL BE 4", AND 3" FOR SLABS ON GRADE. ALL CONCRETE, EXCEPT FOOTINGS, SHALL CONTAIN A WATER REDUCING ADMIXTURE.

E. ALL CONCRETE MIX DESIGNS AND ADMIXTURES SHALL BE APPROVED BY THE ARCHITECT PRIOR TO INITIATION OF FIRST POUR.

F. ALL REINFORCING BARS SHALL CONFORM TO ASTM A-615 GRADE 60. WELDED WIRE FABRIC SHALL CONFORM TO ASTM A-185.

G. ALL CONCRETE SHALL BE SAMPLED AND TESTED BY AN AGENCY RETAINED BY THE CONTRACTOR. THE CONTRACTOR SHALL NOTIFY THE TESTING AGENCY 48 HOURS PRIOR TO THE POURING OF ANY CONCRETE.

H. CONSTRUCTION JOINTS IN WALLS, BEAMS, AND SLABS SHALL BE LOCATED MIDWAY BETWEEN SUPPORTS EXCEPT THAT WHERE AN INTERSECTING MEMBER OCCURS AT MID-SPAN, THE JOINT SHALL BE OFFSET TWICE THE WIDTH OF THE INTERSECTING MEMBER, BEFORE FRESH CONCRETE IS POURED AGAINST CONCRETE IN PLACE, THE CONTACT SURFACES OF CONCRETE IN PLACE SHALL BE THOROUGHLY CLEANED, ALL LAITANCE SHALL BE REMOVED AND THE CONTACT SURFACES SHALL BE THOROUGHLY SLUSHED WITH GROUT CONSISTING OF ONE PART SAND TO ONE PART CEMENT WITH A MINIMUM AMOUNT OF WATER.

J. ALL FORMWORK SHALL BE IN ACCORDANCE WITH THE AMERICAN CONCRETE INSTITUTE "FORMWORK FOR CONCRETE", SPECIAL PUBLICATION NO. 4 AND ACI'S "STANDARD RECOMMENDED PRACTICE FOR CONCRETE FORMWORK" (ACI-347, LATEST LOCAL APPROVED EDITION).

K. SEE MECHANICAL OR ARCHITECTURAL DRAWINGS FOR HOLES IN SLABS NOT SHOWN.

5B. SLABS ON GRADE

A. ALL FLOOR SLABS SHALL BE SCREEDED, FLOATED AND STEEL TROWELED TO A SMOOTH, DENSE AND PLANE SURFACE.

B. SEE FOUNDATION PLAN FOR SLAB ON GRADE THICKNESS AND REINFORCING.

C. FLOOR SLABS SHALL BE FINISHED TO A MINIMUM FLATNESS F NUMBER Ff=20 AND A MINIMUM LEVELNESS F NUMBER Fl=17.

5C. REINFORCING STEEL

A. WELDED WIRE FABRIC SHALL HAVE ENDS LAPPED ON FULL MESH AND SHALL EXTEND INTO SUPPORTING BEAMS OR WALLS, EXCEPT AT SLABS ON GRADE. ALL LAP SPLICES SHALL BE CLASS "B" (1'-0" MIN.) EXCEPT AS NOTED ON PLANS. BEND OUTSIDE FACE WALL HORIZONTAL REINFORCING 1'-0" AROUND ALL CORNERS OR PROVIDE 4'-0" LONG CORNER BARS TO MATCH HORIZONTAL REINFORCING.

B. EXCEPT AS NOTED, ALL REINFORCING SHALL BE HIGH STRENGTH NEW BILLET STEEL CONFORMING TO ASTM DESIGNATION A-615 (LATEST LOCAL APPROVED EDITION) (FY=60,000 PSI). ALL REINFORCING SHALL BE DETAILED, FABRICATED, AND PLACED IN ACCORDANCE WITH THE ACI'S MANUAL OF STANDARD PRACTICE FOR DETAILING CONCRETE STRUCTURES (ACI-315)

C. PROVIDE CONCRETE PROTECTION FOR REINFORCING BARS AS FOLLOWS:

CONCRETE POURED AGAINST EARTH	3"
SLABS	3/4"
WALLS - OUTSIDE FACE	2"
WALLS - INSIDE FACE	1"

1. WHERE CONTINUOUS BARS ARE CALLED FOR, THEY SHALL BE RUN CONTINUOUSLY AROUND CORNERS AND LAPPED AT NECESSARY SPLICES OR HOOKED AT DISCONTINUOUS ENDS. LAPS SHALL BE NOT LESS THAN THE TYPICAL SPLICE LENGTH UNLESS NOTED. GRADUALLY, LAP TOP BARS AT MID-SPAN AND BOTTOM BARS AT SUPPORTS.

D. REINFORCEMENT SHALL BE CONTINUOUS THROUGH ALL CONSTRUCTION JOINTS UNLESS OTHERWISE INDICATED ON THE DRAWINGS.

E. ALL SPLICES IN REINFORCING SHALL BE CLASS "B" SPLICES IN ACCORDANCE WITH ACI-318 (LATEST LOCAL APPROVED EDITION) EXCEPT AS NOTED IN THE PLANS.

6. MASONRY

A. ALL MASONRY CONSTRUCTION AND MATERIALS USED THEREIN (CONCRETE MASONRY, CLAY MASONRY, MORTAR, GROUT AND STEEL REINFORCEMENT) SHALL CONFORM TO "BUILDING CODE REQUIREMENTS FOR MASONRY STRUCTURES" (ACI 530/ASCE 5/TMS 402) AND "SPECIFICATIONS FOR MASONRY STRUCTURES" (ACI 530.1/ASCE 6/TMS 602) IN ALL RESPECTS. WHERE ANCHORS (INCLUDING ANCHOR BOLTS) ARE INDICATED TO BE GROUTED IN CELLS OF HOLLOW CMU, THE CELL CONTAINING THE ANCHOR (OR ANCHOR BOLT) SHALL BE FULLY GROUTED AND IN ADDITION TO THIS CELL THE CELLS ABOVE, BELOW, TO EACH SIDE, AND THE FOUR CELLS ON EACH 45 DEGREE DIAGONAL ADJACENT TO THE CELL CONTAINING THE ANCHOR/ANCHOR BOLT SHALL BE FULLY GROUTED AND THE EIGHT SURROUNDING CELLS SHALL BE FULLY GROUTED.

B. UNLESS OTHERWISE NOTED CONCRETE MASONRY UNITS SHALL HAVE A MINIMUM NET AREA COMPRESSIVE STRENGTH OF 1900 PSI. CLAY MASONRY UNITS SHALL HAVE A MINIMUM NET AREA COMPRESSIVE STRENGTH OF 8000 PSI.

C. MASONRY BEARING WALLS SHALL CONSIST OF STANDARD HOLLOW AND SOLID UNITS CONFORMING TO ASTM C 90 UNLESS OTHERWISE NOTED. CONCRETE MASONRY SHALL BE SAMPLED AND TESTED BY THE MASONRY SUPPLIER ACCORDING TO THE REQUIREMENTS OF "BUILDING CODE REQUIREMENTS FOR MASONRY STRUCTURES" (ACI 530/ASCE 5/TMS 402) AND "SPECIFICATIONS FOR MASONRY STRUCTURES" (ACI 530.1/ASCE 6/TMS 602) AND RESULTS SUBMITTED TO THE ENGINEER FOR APPROVAL. USE FULL HEAD JOINTS, FILL COLLAR JOINTS 100% SOLID AND BOND WALLS TO CROSS-WALLS BY TOOTHING.

D. ALL MORTAR SHALL CONFORM TO THE REQUIREMENTS FOR PROPORTIONS, MIXING, STRENGTH, SAMPLING, TESTING, AND APPLICATION FOR PORTLAND CEMENT/LIME TYPE "S" MORTAR AS DESCRIBED IN ACI 530.

E. MASONRY CONSTRUCTION IS TO BE INSPECTED BY AN EXPERIENCED, QUALIFIED INSPECTOR APPROVED BY THE STRUCTURAL ENGINEER. INSPECTION IS TO BE PROVIDED IN ACCORDANCE WITH THE ACI/ASCE/TMS CODE AND SPECIFICATION.

F. ALL SOLID CMU IS TO BE 100% SOLID CMU OR HOLLOW CMU WITH ALL CELLS FILLED 100% SOLID WITH PEA GRAVEL CONCRETE WITH F'C = 3000 PSI OR GROUT CONFORMING TO ASTM C 476.

G. SEE MASONRY LINTEL SCHEDULE FOR SIZES. ALL ANGLES SHALL HAVE THEIR SHORT LEG OUTSTANDING. ALL MULTIPLE ANGLE LINTELS SHALL BE TACK WELDED TOGETHER AT ENDS AND AT THIRD POINTS. SHORE LINTELS TO PREVENT ROTATION DURING CONSTRUCTION.

H. LAP ALL VERTICAL REINFORCING 48 BAR DIAMETERS MINIMUM.

J. ALL EXTERIOR WALLS AND ALL WALLS SUPPORTING LOADS OTHER THAN THEIR OWN WEIGHT SHALL BE CONSTRUCTED OF LOAD BEARING UNITS.

K. ALL MASONRY WALLS SHALL BE REINFORCED WITH NO. 9 GAGE, 3/16" DIAMETER TRUSS-TYPE HOT DIPPED GALVANIZED JOINT REINFORCEMENT SPACED VERTICALLY AT 16" O/C U.N.O. PROVIDE CORNER AND TEE PIECES AT ALL INTERSECTIONS. LAP ALL JOINT REINFORCEMENT 6" MINIMUM.

L. ALL LOAD-BEARING AND EXTERIOR WALLS SHALL BE LAID WITH FULL FACE AND SHELL BEDDING AND WITH EITHER TYPE "M" OR "S" MORTAR, UNLESS NOTED OTHERWISE.

M. PROVIDE 16" MINIMUM DEPTH OF 100% SOLID MASONRY OR HOLLOW BLOCK FILLED SOLID WITH GROUT BELOW ALL LINTELS, BEAMS, AND BEARING PLATES.

N. BRACE AND SHORE ALL NEW MASONRY WALLS AS REQUIRED UNTIL ROOFDECKS HAVE BEEN COMPLETELY INSTALLED.

P. ALL FILL FOR MASONRY WALLS SHALL BE GROUT CONFORMING TO A.S.T.M. C476 FILL SHALL BE PLACED IN 5'-0" MAXIMUM LIFTS.

Q. USE A 1-CUBIC FOOT CONTAINER FOR MEASUREMENT OF ALL COMPONENTS IN MORTAR MIX.

R. PROVIDE A SOFT JOINT WHERE ANY NON-BEARING MASONRY PARTITIONS OR WALLS ARE LAID TO THE UNDERSIDE OF THE STRUCTURAL FLOOR OR ROOF FRAMING ABOVE.

7. STRUCTURAL AND MISCELLANEOUS STEEL

7A. GENERAL AND NEW CONSTRUCTION

A. ALL STRUCTURAL AND MISCELLANEOUS STEEL SHALL CONFORM TO THE THIRTEENTH EDITION OF THE AISC "SPECIFICATION FOR THE DESIGN, FABRICATION AND ERECTION OF STRUCTURAL STEEL FOR BUILDINGS" AND ALL ITS SUPPLEMENTS, AND TO THE AISC "CODE OF STANDARD PRACTICE FOR STEEL BUILDINGS AND BRIDGES."

B. ALL STRUCTURAL AND MISCELLANEOUS STEEL SHALL CONFORM TO:

W-SHAPES	ASTM 992	FY 50 KSI
CHANNEL, ANGLE, PLATE	ASTM A36	FY 36 KSI

C. ALL WELDED CONNECTIONS SHALL BE DONE WITH E70XX ELECTRODES. ALL BOLTED CONNECTIONS SHALL USE 3/4" ASTM A325N HIGH STRENGTH BOLTS. ALL BEAM CONNECTIONS SHALL DEVELOP THE FULL UNIFORM LOAD CAPACITY THE MEMBER CAN CARRY WITH DUE CONSIDERATION TO CONCENTRATED LOADS AT THE ENDS OF THE MEMBER. NO CONNECTION SHALL BE MADE USING LESS THAN TWO BOLTS.

D. SHOP AND FIELD WELDS SHALL BE MADE BY APPROVED CERTIFIED WELDERS AND SHALL CONFORM TO THE AMERICAN WELDING SOCIETY CODE FOR BUILDINGS AWS D1.1. WELDS SHALL DEVELOP THE FULL STRENGTH OF MATERIALS BEING WELDED, UNLESS OTHERWISE NOTED.

E. NO OPENINGS IN BEAMS SHALL BE PERMITTED WITHOUT THE WRITTEN PERMISSION OF THE ARCHITECT.

F. THE USE OF A GAS-CUTTING TORCH IN THE FIELD FOR CUTTING HOLES OR FOR CORRECTIONS FABRICATION ERRORS WILL NOT BE PERMITTED ON NEW STRUCTURAL FRAMING MEMBERS EXCEPT WITH THE WRITTEN APPROVAL OF THE ARCHITECT FOR EACH SPECIFIC CONDITION.

G. AN INDEPENDENT INSPECTION AGENCY SHALL BE EMPLOYED BY THE CONTRACTOR AND APPROVED BY THE ENGINEER TO INSPECT THE STRUCTURAL STEEL IN THE FIELD AND VERIFY THAT IT CONFORMS TO THE REQUIREMENTS OF THE CONTRACT DOCUMENTS.

H. ALL BUTT WELDS SHALL BE FULL PENETRATION BUTT WELDS IN ACCORDANCE WITH THE STRUCTURAL WELDING CODE (ANSI/AWS D1.1). THESE WELDS SHALL BE MADE ONLY BY OPERATORS QUALIFIED BY PRESCRIBED TESTS IN THE STRUCTURAL WELDING CODE IN BUILDING CONSTRUCTION OF THE AMERICAN WELDING SOCIETY. ACCEPTANCE TO BE SUBJECT TO THE INSPECTION AND REVIEW OF AN INDEPENDENT INSPECTION AGENCY.

J. WELDING SEQUENCE AND TECHNIQUE SHALL BE SUCH THAT DISTORTION OF STEEL MEMBERS IS MINIMIZED AND UNDUE DISTORTION IS AVOIDED.

8. STEEL JOISTS

A. ALL STEEL JOISTS AND JOIST GIRDERS SHALL CONFORM TO THE SJI STANDARD SPECIFICATIONS IN ALL RESPECTS AND SHALL HAVE BRIDGING IN ACCORDANCE WITH THE SJI SPECIFICATIONS. JOISTS SHALL BE WELDED TO STEEL SUPPORTS WITH A MINIMUM OF TWO-1" WELDS. MINIMUM BEARING SHALL BE 4" ON MASONRY (SEE SJI CODE). PROVIDE DOUBLE JOISTS UNDER PARALLEL PARTITIONS WHERE THEIR LENGTH EXCEEDS 1/3 OF THE JOIST SPAN.

B. ALL OPEN WEB LH SERIES JOISTS SHALL BE DESIGNED, FABRICATED AND ERECTED IN ACCORDANCE WITH THE LATEST EDITION OF "STANDARD SPECIFICATIONS AND LOAD TABLES" AS ADOPTED BY THE STEEL JOIST INSTITUTE.

C. MECHANICAL EQUIPMENT SHALL NOT BE PLACED DIRECTLY ON THE JOISTS WITHOUT THE APPROVAL OF THE ENGINEER. NO EQUIPMENT SHALL BE SUPPORTED FROM THE BOTTOM CHORD OR BETWEEN PANEL POINTS OF THE JOISTS.

D. ALL STEEL JOISTS, SHALL BE INSPECTED BY AN AGENCY RETAINED BY THE CONTRACTOR. IT SHALL BE THE CONTRACTOR'S RESPONSIBILITY TO INFORM THE INSPECTION AGENCY OF THE PROGRESS OF THE STEEL ERECTION AND TO NOTIFY THE AGENCY 24 HRS. PRIOR TO A REQUESTED INSPECTION. THE CONTRACTOR SHALL PROVIDE ANY ASSISTANCE REQUIRED BY THE INSPECTOR FOR THE COMPLETION OF HIS DUTIES.

E. ALL REQUIREMENTS FOR INSPECTION, WELDER'S CERTIFICATION, AND SHOP DRAWINGS AS DESCRIBED IN THE GENERAL NOTES FOR SHOP DRAWINGS AND STRUCTURAL AND MISCELLANEOUS STEEL SHALL APPLY TO STEEL JOISTS.

F. PROVIDE BOLTED ERECTION CONNECTION FOR JOIST CLOSEST TO THE CENTERLINE OF THE COLUMN.

9. METAL DECKING

A. ALL METAL DECKING SHALL BE DESIGNED, FABRICATED AND ERECTED IN ACCORDANCE WITH THE LATEST EDITION OF THE "SPECIFICATION OF THE STEEL DECK INSTITUTE." ALL METAL DECKING SHALL BE THREE SPAN CONTINUOUS.

B. ALL METAL ROOF DECK SHALL BE GALVANIZED, 1-1/2"-20 GAGE WIDE RIB TYPE "B" DECKING AS MANUFACTURED BY UNITED STATES DECK INC. OR AN APPROVED EQUIVALENT.

C. GALVANIZING FOR ALL, ROOF DECKING SHALL CONFORM TO THE REQUIREMENTS OF ASTM A525 CLASS G90.

D. METAL DECKING SHALL BE FASTENED TO SUPPORTS AND AROUND PERIMETER WITH 5/8" PLUG WELDS. SEE TYPICAL DETAIL FOR FASTENING FREQUENCY.

E. PROVIDE STEEL HEADER FRAMES FOR SUPPORT OF METAL DECKING FOR ALL OPENINGS GREATER THAN 10" SQUARE.

F. PROVIDE FLEXIBLE RUBBER CLOSURES BETWEEN FLUTES OF METAL DECKING AND MASONRY WALLS.

07/09/10

CAUTION: IF SHEET IS LESS THAN 36" X 24" USE GRAPHIC SCALE

SYM	DESCRIPTION	DATE	APPR

NAVFAC

MCA MARSHALL CRAFT ASSOCIATES
Marshall Craft Associates, Inc.
Architecture / Interior Design / Planning
6112 York Road, Baltimore, Maryland 21212-2611
410.532.3131 Fax 410.532.3006

WHITNEY BAILEY COX & MAGNANI, LLC
849 Fairmount Ave. Suite 100 Baltimore, MD 21286
Tel. 410-512-4500 Fax. 410-324-4100
www.wbcm.com
WBCM ARCHITECTURE ENGINEERING CONSTRUCTION
AE LOGO

DES | DRW
REVIEWED BY
PM/DM
CHIEF ENG/ARCH
SEAL

DEPARTMENT OF THE NAVY — NAVFAC
NAVAL FACILITIES ENGINEERING COMMAND
ROICC — WASHINGTON NAVY YARD, WASHINGTON D.C.
NAVAL RESEARCH LABORATORY — DISTRICT OF COLUMBIA
RENOVATION OF BUILDING A69
WASHINGTON, D.C.
GENERAL NOTES

CODE ID. NO.	80091
SIZE	D
SCALE:	
MAXIMO NO.	JPXMY
STA. PROJ. NO.	855305
WORK ORDER NO.	0010
CONSTR. CONTR. NO.	
NAVFAC DRAWING NO.	13022540
SHEET	40 OF 93

S3.0

MECHANICAL SYMBOLS AND ABBREVIATIONS

- SOIL, WASTE, OR SANITARY PIPE
- AR — ACID RESISTANT SANITARY PIPE
- GI — GREASE INTERCEPTOR SANITARY PIPE
- STORM WATER PIPE
- OI — OIL INTERCEPTOR STORM WATER PIPE
- FOUNDATION DRAIN TILE
- CD — CONDENSATE DRAIN PIPE
- VENT PIPE
- AR — ACID RESISTANT VENT PIPE
- DOMESTIC COLD WATER PIPE
- DOMESTIC HOT WATER PIPE
- DOMESTIC HOT WATER RETURN PIPE
- LCW — DOMESTIC COLD WATER PIPE
- LHW — DOMESTIC HOT WATER PIPE
- LHWR — DOMESTIC HOT WATER RETURN PIPE
- T — DOMESTIC TEMPERED WATER PIPE
- S — SPRINKLER SUPPLY PIPE
- F — FIRE LINE PIPE
- A — COMPRESSED AIR PIPE
- G — GAS PIPE
- V — VACUUM PIPE
- CS — CHILLED WATER SUPPLY PIPE
- CR — CHILLED WATER RETURN PIPE
- CS(P) — CHILLED/HEATING SUPPLY PIPE
- CR(P) — CHILLED/HEATING RETURN PIPE
- CDS — CONDENSER WATER SUPPLY PIPE
- CDR — CONDENSER WATER RETURN PIPE
- CHS — CHILLED/HEATING SUPPLY PIPE
- CHR — CHILLED/HEATING RETURN PIPE
- HS — HEATING WATER SUPPLY PIPE
- HR — HEATING WATER RETURN PIPE
- LPS — LOW PRESSURE STEAM PIPE
- HPS — HIGH PRESSURE STEAM PIPE
- LPC — LOW PRESSURE CONDENSATE PIPE
- HPC — HIGH PRESSURE CONDENSATE PIPE
- PC — PUMPED CONDENSATE PIPE
- CO — CO — CLEANOUT
- BACK WATER VALVE
- FLOOR DRAIN
- ROOF DRAIN
- WALL HYDRANT
- HOSE BIBB
- FIRE DEPARTMENT CONNECTION (SIAMESE)
- SPRINKLER HEAD
- E — PIPE CAP OR PLUG
- UNION
- FLANGED PIPE CONNECTION
- PIPE ANCHOR
- PIPE GUIDE
- PIPE RUNNING IN SPLIT TILE
- FLEXIBLE CONNECTION (PIPING)
- EXPANSION JOINT
- CONCENTRIC REDUCER
- ECCENTRIC REDUCER
- STEAM DRIP ASSEMBLY
- FLOW DIRECTION ARROW
- STRAINER
- SHUT-OFF VALVE
- VALVE IN VERTICAL PIPE
- VALVE WITH MONITORING SWITCH
- BALANCING VALVE
- R — READABLE BALANCING VALVE
- GLOBE VALVE
- 2-WAY AUTOMATIC TEMPERATURE CONTROL (ATC) VALVE
- 3-WAY AUTOMATIC TEMPERATURE CONTROL (ATC) VALVE
- PRESSURE REDUCING VALVE
- 30 PSI — PRESSURE RELIEF VALVE (NUMERALS INDICATE SETTING)
- GAUGE COCK
- VACUUM BREAKER
- 0'-100' F — THERMOMETER (NUMERALS INDICATE GRADUATION RANGE)
- 5-60 PSI — PRESSURE GAUGE (NUMERALS INDICATE GRADUATION RANGE)
- F — 20 GPM — FLOW METER FITTING (METER WHERE NOTED) (NUMERALS INDICATE FLOW REQUIRED)
- AUTOMATIC AIR VENT
- CO_2 — CO2 (CARBON DIOXIDE SENSOR)

- FS — FLOW SWITCH
- CHECK VALVE; (ARROWHEAD INDICATES DIRECTION OF FLOW)
- BACKFLOW PREVENTER
- WATER HAMMER ARRESTER
- GAUGE COCK WITH SIPHON FITTING
- DRIP POINT (HPS – LPS)
- STEAM TRAP
- 18"x12" — DUCT (SIZE IN INCHES, FIRST FIGURE SIDE SHOWN)
- SUPPLY OR OUTDOOR AIR DUCT SECTION
- RETURN OR EXHAUST AIR DUCT SECTION
- ACOUSTICALLY LINED DUCT; A/L (DIMENSIONS SHOWN ARE SHEET METAL SIZE)
- AUTOMATIC TEMPERATURE CONTROL (ATC) DAMPER
- MANUAL VOLUME DAMPER
- FIRE DAMPER
- F/S — FIRE/SMOKE DAMPER
- MOTORIZED FIRE DAMPER
- S — SMOKE DAMPER
- SD — SMOKE DETECTOR
- AIR DEVICE WITH 2'x2' LAY-IN PANEL
- SQUARE TO ROUND TRANSITION
- D — INCLINED DROP IN DIRECTION OF ARROW
- R — INCLINED RISE IN DIRECTION OF ARROW
- FLEXIBLE CONNECTION (DUCTWORK)
- ROUND FLEXIBLE DUCT
- ROUND STRAIGHT DUCT TAP FITTING WITH MANUAL VOLUME DAMPER CONNECTING TO RECTANGULAR DUCT
- ROUND CONICAL DUCT TAP FITTING WITH MANUAL VOLUME DAMPER CONNECTING TO RECTANGULAR DUCT
- ROUND CONICAL DUCT TAP FITTING CONNECTING TO RECTANGULAR DUCT
- RECTANGULAR 45 DEGREE DUCT TAP FITTING
- A — SOUND ATTENUATOR. LETTER DESIGNATES SPECIFIC UNIT. SEE SCHEDULE.
- X — INDICATES CONTINUATION ON SANITARY RISER DIAGRAM (X DENOTES RISER DIAGRAM)
- INDICATES PIPING DIAGRAM
- 3 / M9 — DETAIL OR DIAGRAM NO. 3 SHOWN ON DRAWING NO. M9
- 3 / M7/M9 — SECTION NO. 3 FROM DRAWING NO. M7 SHOWN ON DRAWING NO. M9 (ARROW DENOTES SECTION)
- SPS — STATIC PRESSURE SENSOR
- E — EMERGENCY FAN DISCONNECT SWITCH
- TEMPERATURE SENSOR
- H — HUMIDITY SENSOR
- POINT OF CONNECTION, NEW TO EXISTING
- DEMOLITION WORK TERMINATION POINT
- 1 — SYMBOL FOR SPECIFIC NOTE. NOTE APPLIES TO DRAWING ON WHICH IT OCCURS.

ø	INDICATES DIAMETER
☐	INDICATES SQUARE FOOT
A/D	ACCESS DOOR
A/L	ACOUSTICALLY LINED
A	COMPRESSED AIR PIPE
AAV	AUTOMATIC AIR VENT
ABV	ABOVE
AC	AIR CURTAIN
AFF	ABOVE FINISHED FLOOR
AHU	AIR HANDLING UNIT
ALUM	ALUMINUM
APD	AIR PRESSURE DROP
AR	ACID RESISTANT
ASSOC	ASSOCIATED
ATC	AUTOMATIC TEMPERATURE CONTROL
AWT	AVERAGE WATER TEMPERATURE
BDD	BACKDRAFT DAMPER
BLDG	BUILDING
BLW	BELOW
BTM	BOTTOM
BTUH	BRITISH THERMAL UNITS PER HOUR
BV	BALANCING VALVE
BWV	BACK WATER VALVE
CA	COMPRESSED AIR
CD	CONDENSATE DRAIN
CDR	CONDENSER WATER RETURN PIPE
CDS	CONDENSER WATER SUPPLY PIPE
CFM	CUBIC FEET PER MINUTE
CHR	CHILLED/HEATING RETURN PIPE
CHS	CHILLED/HEATING SUPPLY PIPE
CI	CAST IRON
CLG	CEILING
CO	CLEANOUT
CONC	CONCRETE
CONN	CONNECT, CONNECTION
CONT'N	CONTINUATION
CR	CHILLED WATER RETURN PIPE
CS	CHILLED WATER SUPPLY PIPE
CR(P)	PROCESS CHILLED WATER RETURN PIPE
CS(P)	PROCESS CHILLED WATER SUPPLY PIPE
CTP	CONDENSATE TRANSFER PACKAGE
CUH	CABINET UNIT HEATER
CV	CHECK VALVE
CW	DOMESTIC COLD WATER PIPE
CX	CONTINUE EXISTING
DB	DRY BULB
DDC	DIRECT DIGITAL CONTROL
DESG	DESIGNATION
DF	DRINKING FOUNTAIN
DHC	DUCT HEATING COIL
DIA	DIAMETER
DWG	DRAWING
EA	EXHAUST AIR
EAT	ENTERING AIR TEMPERATURE
EDB	ENTERING DRY BULB
EF	EXHAUST FAN
EG	EXHAUST GRILLE
EJ	EXPANSION JOINT
ELEC	ELECTRIC
ELEV	ELEVATION
ER	EXHAUST REGISTER
ESP	EXTERNAL STATIC PRESSURE
ETR	EXISTING TO REMAIN
EWB	ENTERING WET BULB
EWT	ENTERING WATER TEMPERATURE
EX	EXISTING
EXH	EXHAUST
EXP	EXPANSION
F/D	FIRE DAMPER
F/S	FIRE/SMOKE DAMPER
F	FAHRENHEIT OR FIRE LINE PIPE
F&T	FLOAT & THERMOSTATIC
FD	FLOOR DRAIN
FDC	FIRE DEPARTMENT CONNECTION
FHC	FIRE HOSE CABINET
FHV	FIRE HOSE VALVE
FL	FLOOR
FLA	FULL LOAD AMPERES
FOB	FLAT ON BOTTOM
FOT	FLAT ON TOP
FPS	FEET PER SECOND
FT	FEET, FLASH TANK
FT HD	FEET OF HEAD
FU	FIXTURE UNITS
G	GAS PIPE
GALV	GALVANIZED
GI	GREASE INTERCEPTOR
GPM	GALLONS PER MINUTE
GR	GRILLE
HB	HOSE BIBB
HP	HORSEPOWER
HPC	HIGH PRESSURE CONDENSATE PIPE
HPS	HIGH PRESSURE STEAM PIPE
HR	HEATING WATER RETURN PIPE
HS	HEATING WATER SUPPLY PIPE
HW	DOMESTIC HOT WATER PIPE
HWR	DOMESTIC HOT WATER RETURN PIPE
HX	HEAT EXCHANGER
IN	INCH, INCHES
INV	INVERT
LAT	LEAVING AIR TEMPERATURE
LB(S)	POUND(S)
LCW	LABORATORY COLD WATER PIPE
LDB	LEAVING DRY BULB
LF	LINEAR FEET
LHW	LABORATORY HOT WATER PIPE
LHWR	LBAORATORY HOT WATER RETURN PIPE
LPC	LOW PRESSURE CONDENSATE PIPE
LPS	LOW PRESSURE STEAM PIPE
LRA	LOCKED ROTOR AMPERES
LSD	LINEAR SLOT DIFFUSER
LWB	LEAVING WET BULB
LWT	LEAVING WATER TEMPERATURE
MAX	MAXIMUM
MBH	THOUSAND BTU'S PER HOUR
MCA	MINIMUM CIRCUIT AMPACITY
MECH	MECHANICAL
MF/D	MOTORIZED FIRE DAMPER
MFR	MANUFACTURER
MIN	MINIMUM
MOP	MAXIMUM OVERCURRENT PROTECTION
MTD	MOUNTED
MVD	MANUAL VOLUME DAMPER
NC	NORMALLY CLOSED
NIC	NOT IN CONTRACT
NO	NORMALLY OPEN
OAI	OUTDOOR AIR INTAKE
OA	OUTDOOR AIR
OC	ON CENTER
OED	OPEN END DUCT WITH 1/2" FRAMED WIRE MESH SCREEN
OFD	OVERFLOW DRAIN
OI	OIL INTERCEPTOR
PC	PUMPED CONDENSATE PIPE
PD	PRESSURE DROP
PHX	PLATE HEAT EXCHANGER
PR	PRESSURE RELIEF
PRG	PRESSURE RELIEF GRILLE
PRV	PRESSURE REDUCING VALVE
PSIG	POUNDS PER SQUARE INCH GAUGE
PSI	POUNDS PER SQUARE INCH
PUH	PROPELLER UNIT HEATER
RA	RETURN AIR
RD	ROOF DRAIN
REG	REGISTER
REQ'D	REQUIRED
RF	RETURN FAN
RG	RETURN GRILLE
RL	REFRIGERANT LIQUID
RLA	RUNNING LOAD AMPERES
RPM	REVOLUTIONS PER MINUTE
RR	RETURN REGISTER
RS	REFRIGERANT SUCTION
RX	REMOVE EXISTING
S/D	SMOKE DAMPER
S/M	SHEET METAL
S/S	SPRINKLER SUPPLY PIPE STAINLESS STEEL
SA	SUPPLY AIR
SAN	SANITARY
SD	SUPPLY DIFFUSER
SF	SUPPLY FAN OR SQUARE FEET
SG	STEAM GENERATOR
SP	STATIC PRESSURE
SPD	STATIC PRESSURE DROP
SPEC	SPECIFICATION
SR	SUPPLY REGISTER
SST	SATURATED SUCTION TEMPERATURE
STL	STEEL
SQ	SQUARE
SV	SAFETY VALVE
SW	STORM WATER PIPE
TEMP	TEMPERATURE
TG	TRANSFER GRILLE
TSP	TOTAL STATIC PRESSURE
TW	DOMESTIC TEMPERED WATER PIPE
TYP	TYPICAL
UON	UNLESS OTHERWISE NOTED
V	VACUUM PIPE
VCP	VITRIFIED CLAY PIPE
VCPX	VITRIFIED CLAY PIPE-EXTRA STRENGTH
VP	VENT PIPE
VTR	VENT THRU ROOF
W/	WITH
W/O	WITHOUT
WB	WET BULB
WC	WATER COLUMN
WH	WALL HYDRANT

07/09/10

CAUTION: IF SHEET IS LESS THAN 36" X 24" USE GRAPHIC SCALE

SYM	DESCRIPTION	DATE	APPR.

NAVFAC

MARSHALL CROFT ASSOCIATES ARCHITECTS, INC.
Marshall-Croft Associates, Inc.
Architecture / Interior Design / Planning
6112 York Road, Baltimore, Maryland 21212-2611
410.532.3131 Fax 410.532.3206

James Posey Associates
Mechanical & Electrical Engineers
Baltimore, MD
tel 410-265-6100
jamesposey.com

Comm. No. 5777-09 SEAL

DES | DRW
REVIEWED BY
PM/DM
CHIEF ENG/ARCH

DEPARTMENT OF THE NAVY
NAVAL FACILITIES ENGINEERING COMMAND
WASHINGTON NAVY YARD, WASHINGTON D.C.
NAVFAC
ROICC
NAVAL RESEARCH LABORATORY
DISTRICT OF COLUMBIA
RENOVATION OF BUILDING A69
WASHINGTON, D.C.
SYMBOLS & ABBREVIATIONS

CODE ID. NO. 80091 | SIZE D
SCALE: NONE
MAXIMO NO. JPXMY
STA. PROJ. NO. 855305
WORK ORDER NO. 0010
CONSTR. CONTR. NO.
NAVFAC DRAWING NO. 13022541
SHEET 41 OF 93

M0.1

DRAWFORM REVISION: 01 MAY 2006

REVDATE: FILE NAME: I:\5777-09\5-Drawings\5777M0.1.dwg LAYOUT NAME: M0.1 PLOTTED: Tuesday, July 06, 2010 - 10:54am

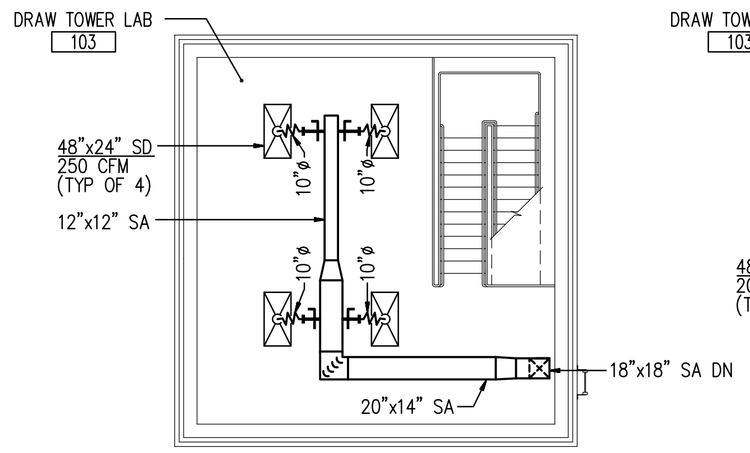

3 M2.1 SECOND FLOOR PLAN
MECHANICAL ALTERNATE
SCALE: 1/8"=1'-0"

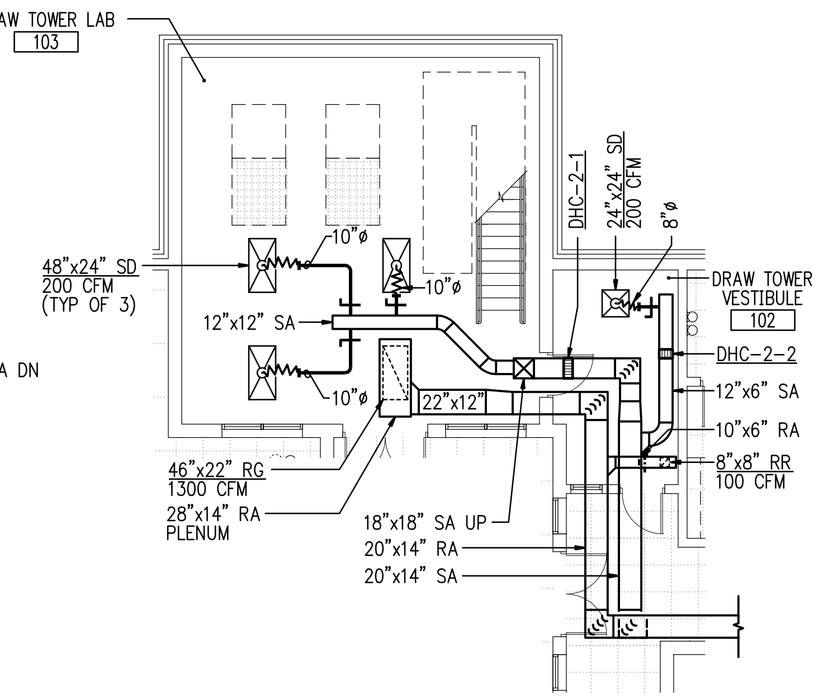

2 M2.1 FIRST FLOOR PLAN
MECHANICAL ALTERNATE
SCALE: 1/8"=1'-0"

GENERAL NOTES:

A. DO NOT LOCATE DUCTWORK OR PIPING ABOVE ELECTRICAL PANELS OR EQUIPMENT.

SPECIFIC NOTES:

1. 14"ø S/S EA DOWN TO FUME HOOD. TRANSITION AND CONNECT TO FULL SIZE HOOD CONNECTION.
2. DUCT RUNS IN TRUSS SPACE TIGHT TO UNDERSIDE OF ROOF DECK.
3. 20"x14" RA (TOP); 20"x14" SA (MIDDLE); 16"ø EA (BOTTOM)
4. 18"x18" SA UP TO FUTURE DRAW TOWER LAB CEILING SPACE AND CAP AS PART OF BASE BID. REFER TO ALTERNATE PLAN, THIS SHEET, FOR WORK ASSOCIATED WITH ALTERNATE.
5. 48"x24" SD WITH 10"ø DUCT CONNECTION; 175 CFM. (TYP OF 4)
6. 48"x24" SD WITH 12"ø DUCT CONNECTION; 250 CFM. (TYP OF 6)
7. 24"x24" SD WITH 8"ø DUCT CONNECTION; 100 CFM.
8. 12"x12" RG WTIH 16"x8" BRANCH DUCT CONNECTION; 300 CFM
9. 48"x20" RG; 0" DEFLECTION; 4300 CFM; CONNECT TO 48"x20" RA.
10. 30"x18" RA
11. 30"x18" RA
12. 8"x6" ER; 100 CFM
13. 24"x10" S/S ER; MOUNTED 8" AFF. COORDINATE EXACT LOCATION WITH CABINET. CONNECT TO 26"x8" S/S EA. 400 CFM.
14. 14"ø S/S CAPED CONNECTION TO FUTURE FUME HOOD.
15. DUCTS RUN THROUGH OPEN WEB TRUSSES.
16. 2"ø EA CONNECTION W/ IRIS DAMPER. (TYP OF 2).
17. 2"ø EA CONNECTION W/ IRIS DAMPER.
18. 12"ø EA UP TO EF-3 ON ROOF; TRANSITION TO 12"x12" IN VERTICAL.
19. 9"x9" SD; 200 CFM. (2-WAY)
20. DHC-2-1 (BASE BID)
21. EXTEND DUCTWORK FROM POINT INDICATED TO DRAW TOWER VESTIBULE AND DRAW TOWER LAB, PROVIDE AIR DEVICES AND BALANCE TO AIRFLOWS INDICATED AS PART OF BASE BID. REFER TO ALTERNATE PLAN, THIS SHEET, FOR WORK ASSOCATED WITH ALTERNATE.

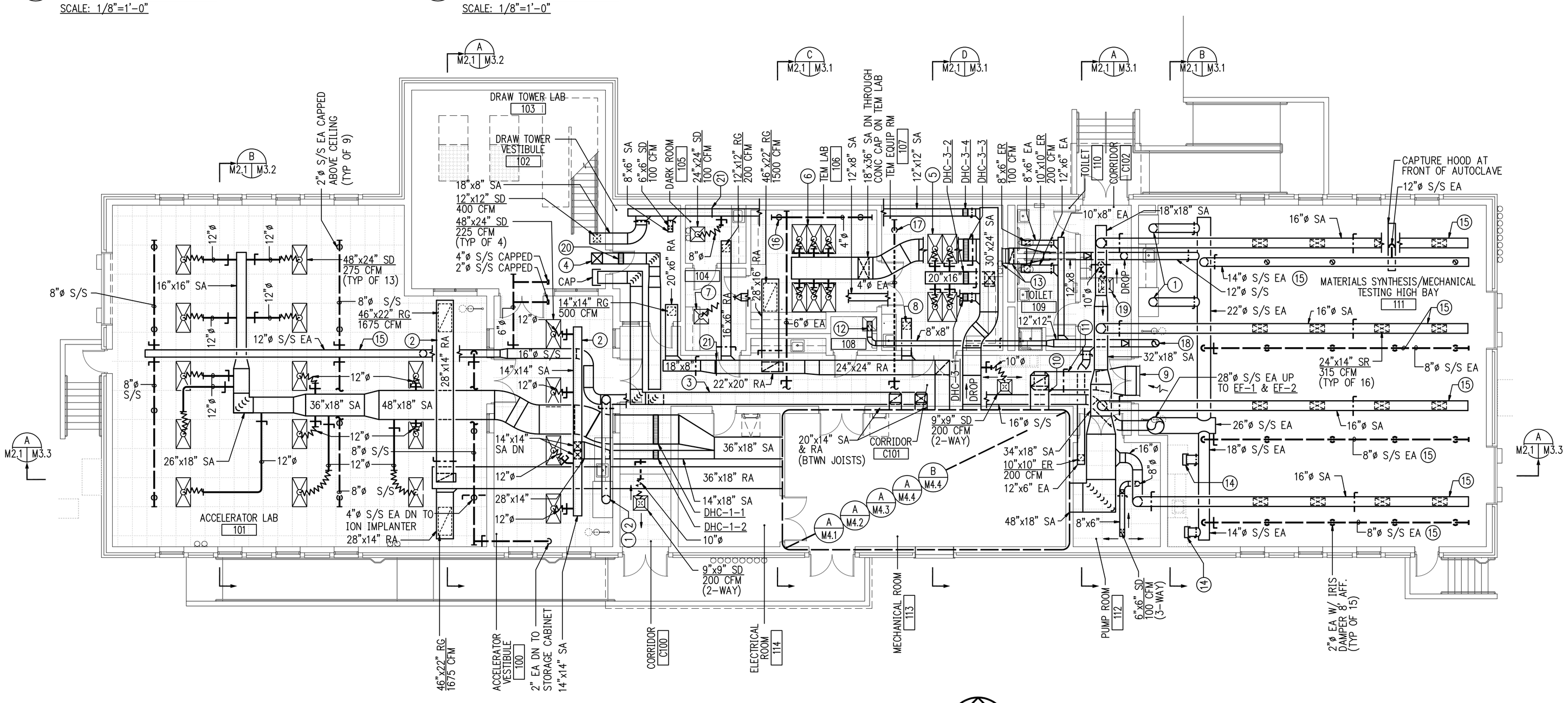

1 M2.1 FIRST FLOOR PLAN – MECHANICAL
SCALE: 1/8"=1'-0"

NORTH

8 4 0 8 16
SCALE: 1/8" = 1'-0"

07/09/10

CAUTION: IF SHEET IS LESS THAN 36" X 24" USE GRAPHIC SCALE

SYM	DESCRIPTION	DATE	APPR

NAVFAC

MARSHALL CRAFT ASSOCIATES
Marshall-Craft Associates, Inc.
Architecture / Interior Design / Planning
6112 York Road, Baltimore, Maryland 21212-2611
410.532.3131 Fax 410.532.3206

James Posey Associates
Mechanical & Electrical Engineers
Baltimore, MD
tel 410-265-6100
jamesposey.com

Comm. No. 5777-09 SEAL

DES | DRW
REVIEWED BY
PM/DM
CHIEF ENG/ARCH

DEPARTMENT OF THE NAVY
NAVFAC
NAVAL FACILITIES ENGINEERING COMMAND
WASHINGTON NAVY YARD, WASHINGTON D.C.
ROICC
NAVAL RESEARCH LABORATORY
DISTRICT OF COLUMBIA
RENOVATION OF BUILDING A69
WASHINGTON, D.C.
FIRST FLOOR PLAN - MECHANICAL

CODE ID. NO. 80091 | SIZE D
SCALE: 1/8"=1'-0"
MAXIMO NO. JPXMY
STA. PROJ. NO. 855305
WORK ORDER NO. 0010
CONSTR. CONTR. NO.

NAVFAC DRAWING NO.
13022547

SHEET 47 OF 93

M2.1

DRAWFORM REVISION: 01 MAY 2006

REVDATE: FILE NAME: I:\5777-09\5-Drawings\5777M2.1.dwg LAYOUT NAME: M2.1 PLOTTED: Tuesday, July 06, 2010 - 10:56am

GENERAL NOTES:

A. DO NOT LOCATE DUCTWORK OR PIPING ABOVE ELECTRICAL PANELS OR EQUIPMENT.

SPECIFIC NOTES:

1. PIPING RISES UP TO AN ELEVATION ABOVE THE HOIST BEAM IN TESTING HIGH BAY-111.
2. DHC-2-1 & ASSOC 1" PIPING & CONTROLS INCLUDED IN BASE BID; REFER TO ALTERNATE PLAN, THIS SHEET, FOR WORK ASSOCIATED WITH ALTERNATE.
3. EXTEND VENTS FROM AUTOCLAVE TO ROOF AND TERMINATE WITH GOOSENECK (TYP OF TWO 1" VENTS AND ONE 1 1/2" VENT). CONSTRUCT VENTS OF COMPATIBLE MATERIALS TO EXISTING EQUIPMENT.

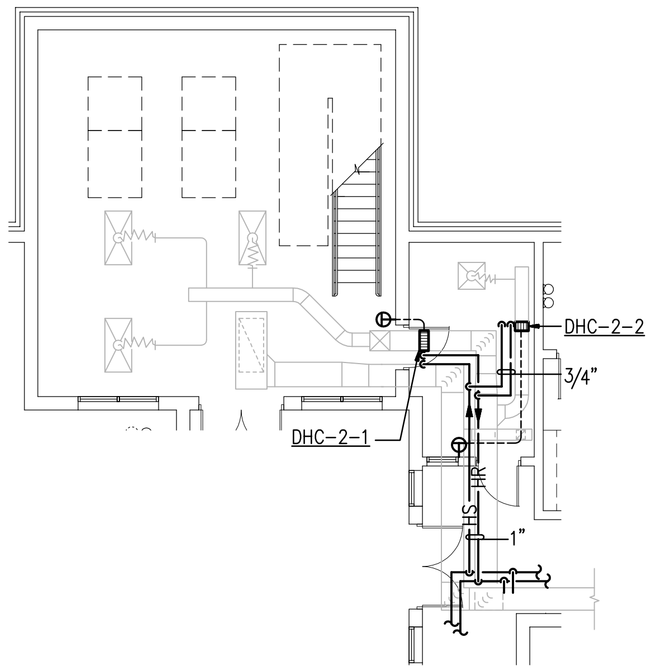

3 M2.2 FIRST FLOOR PLAN
MECHANICAL PIPING ALTERNATE
SCALE: 1/8"=1'-0"

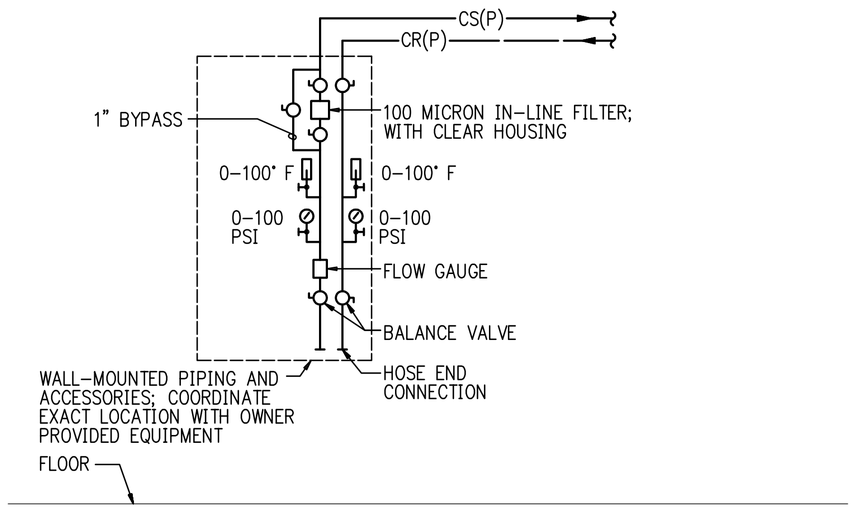

DIAGRAM 2 M2.2
PROCESS CHILLED WATER PIPING EQUIPMENT CONNECTIONS
NOT TO SCALE

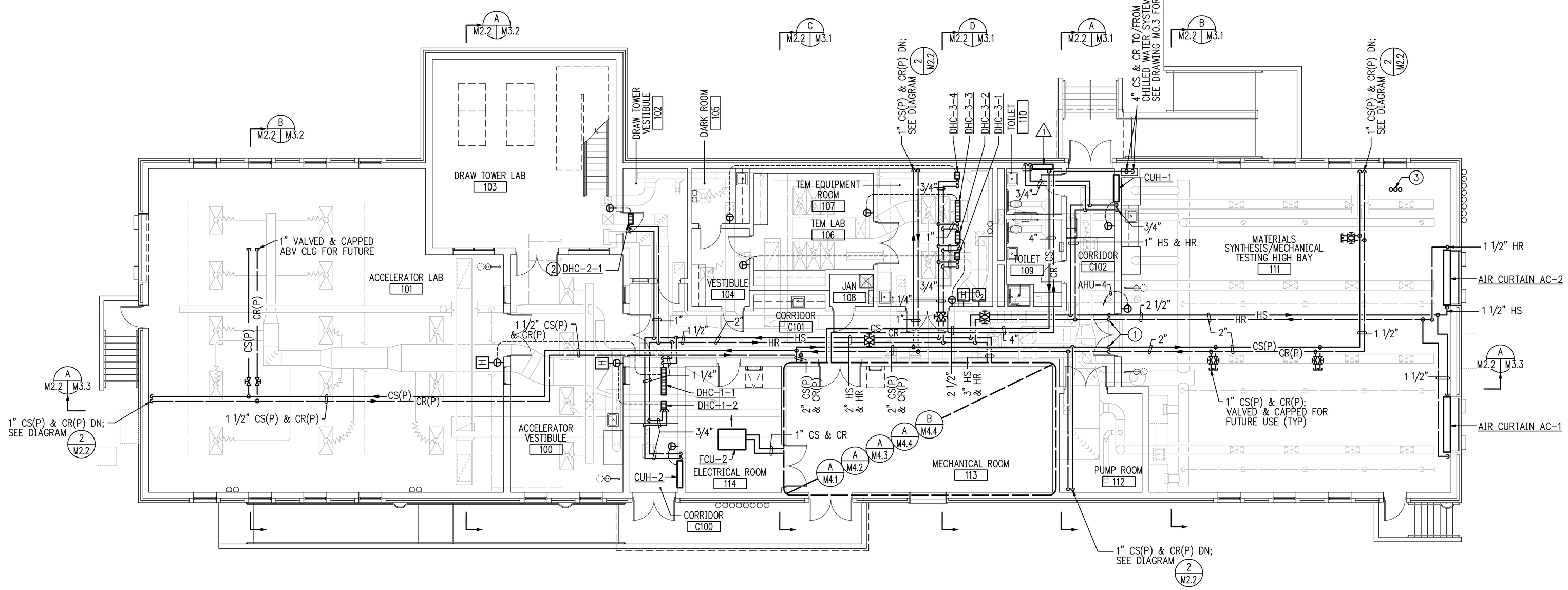

1 M2.2 FIRST FLOOR PLAN – MECHANICAL PIPING
SCALE: 1/8"=1'-0"

NORTH

8 4 0 8 16
SCALE: 1/8" = 1'-0"

07/09/10

CAUTION: IF SHEET IS LESS THAN 36" X 24" USE GRAPHIC SCALE

SYM	DESCRIPTION	DATE	APPR

NAVFAC

MARSHALL CRAFT ASSOCIATES
Marshall Craft Associates, Inc.
Architecture / Interior Design / Planning
6112 York Road, Baltimore, Maryland 21212-2611
410.532.3131 Fax 410.532.3036

James Posey Associates
Mechanical & Electrical Engineers
Baltimore, MD
tel 410-265-6100
jamesposey.com

Comm. No. 5777-09 SEAL

DES | DRW
REVIEWED BY
PM/DM
CHIEF ENG/ARCH

DEPARTMENT OF THE NAVY
NAVAL FACILITIES ENGINEERING COMMAND
WASHINGTON NAVY YARD, WASHINGTON D.C.
ROICC
NAVAL RESEARCH LABORATORY
DISTRICT OF COLUMBIA
RENOVATION OF BUILDING A69
WASHINGTON, D.C.
FIRST FLOOR PLAN - MECHANICAL PIPING

CODE ID. NO. 80091 | SIZE D
SCALE: 1/8"=1'-0"
MAXIMO NO. JPXMY
STA. PROJ. NO. 855305
WORK ORDER NO. 0010
CONSTR. CONTR. NO.
NAVFAC DRAWING NO. 13022548
SHEET 48 OF 93
M2.2

DRAWFORM REVISION: 01 MAY 2006

REVDATE: FILE NAME: I:\5777-09\5-Drawings\5777M2.2.dwg LAYOUT NAME: M2.2 PLOTTED: Tuesday, July 06, 2010 - 10:57am

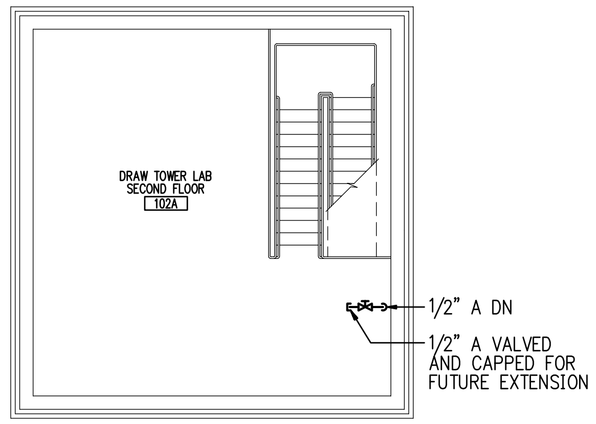

2 P2.1 SECOND FLOOR PLAN
SCALE: 1/8"=1'-0"

NORTH

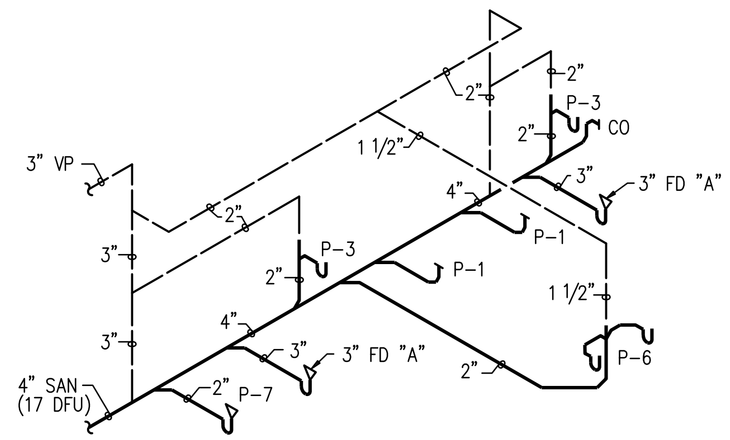

SANITARY RISER DIAGRAM "A"
NOT TO SCALE

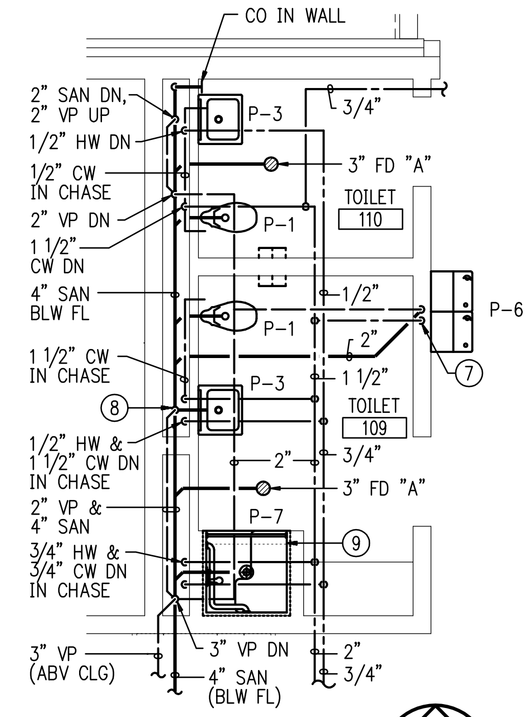

3 P2.1 PART PLAN
SCALE: 1/4"=1'-0"

NORTH

GENERAL NOTES:

A. DO NOT LOCATE PIPING ABOVE ELECTRICAL PANELS OR EQUIPMENT.

SPECIFIC NOTES:

1. 4" CI SW DOWNSPOUT BOOT WITH 4" CI SW DRAIN; SEE DETAIL 3/P3.1
2. FUTURE SINK. PROVIDE ROUGH-IN FOR FUTURE CONNECTION.
3. 1/2" A DOWN TO WALL MOUNTED PRESSURE REGULATOR; SEE DETAIL 3/P3.2
4. 1/2" A DOWN TO QUICK DISCONNECT; MOUNT 10'-0" AF.
5. 1/2" LCW, 1/2" LHW, AND 2" SAN DN; 2" VP UP.
6. 4" SW DISCHARGE ABOVE GRADE AND ONTO SPLASHBLOCK.
7. 1/2" CW AND 1 1/2" VP DOWN IN WALL; 2" SAN DOWN THROUGH FLOOR.
8. 1/2" CW AND 1/2" HW CONNECT TO LAV; 2" VP UP AND 2" SAN DN THROUGH FLOOR.
9. SHOWER IS INCLUDED IN ALTERNATE. BASE BID INCLUDES ROUGH-IN; IF ALTERNATE IS ACCEPTED PROVIDE SHOWER, TRIM AND CONNECTIONS.
10. 2" VP DN THROUGH FLOOR, OFFSET & CONNECT TO 4" SAN AS INDICATED. COORDINATE LOCATION OF VP RISER WITH EQUIPMENT BEAM LOCATION ABOVE.
11. 2" SAN DN, 2" VP UP, 1 1/4" TW DN; LOCATE THERMOSTATIC WATER TEMPERATURE CONTROLLER ABOVE CEILING.
12. PIPING RISES UP TO AN ELEVATION ABOVE THE HOIST BEAM IN TESTING HIGH BAY-111.
13. 1 1/2" LCW, 1 1/2" LHW & 1" LHWR
14. 2" CW & 3/4" HW
15. 1/2" LCW DN TO FUME HOOD
16. 2" SAN DN, 2" VP UP, 1/2" HW & CW DN

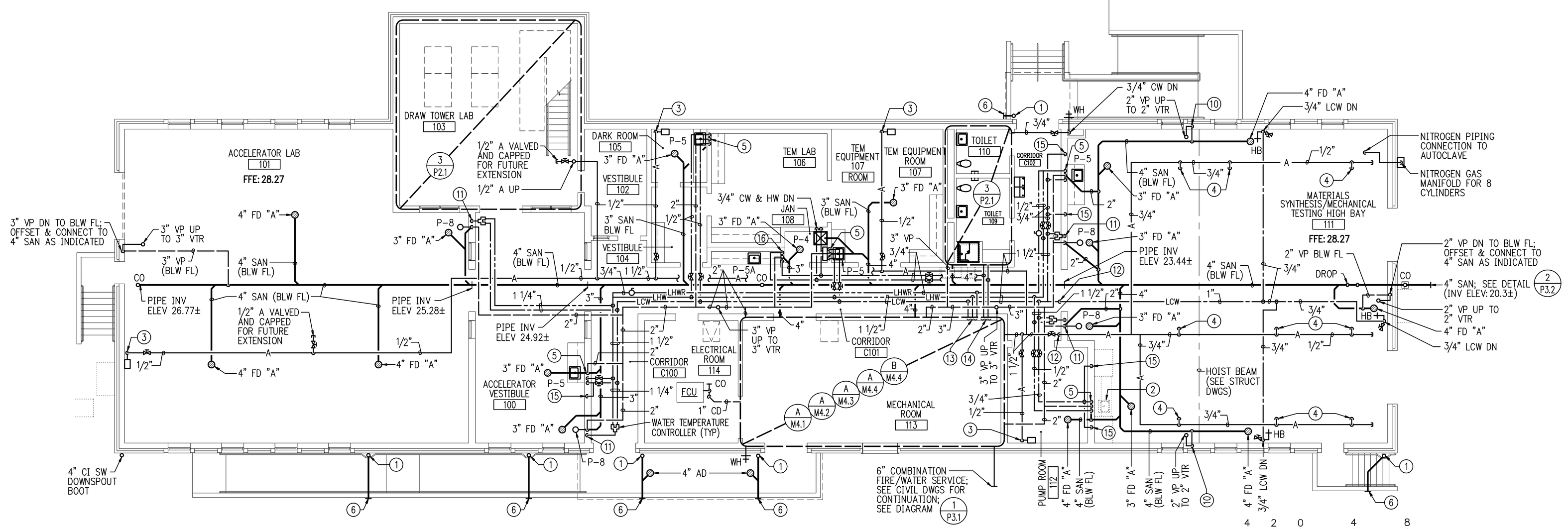

1 P2.1 FIRST FLOOR PLAN
SCALE: 1/8"=1'-0"

NORTH

SCALE: 1/4" = 1'-0"

SCALE: 1/8" = 1'-0"

07/09/10

CAUTION: IF SHEET IS LESS THAN 36" X 24" USE GRAPHIC SCALE

SYM	DESCRIPTION	DATE	APPR.

NAVFAC

MARSHALL CROFT ASSOCIATES
Marshall Croft Associates, Inc.
Architecture / Interior Design / Planning
6112 York Road, Baltimore, Maryland 21212-2611
410.532.3131 Fax: 410.532.3206

James Posey Associates
Mechanical & Electrical Engineers
Baltimore, MD
tel 410-265-6100
jamesposey.com

Comm. No. 5777-09 SEAL

DES | DRW
REVIEWED BY
PM/DM
CHIEF ENG/ARCH

DEPARTMENT OF THE NAVY
NAVFAC
NAVAL FACILITIES ENGINEERING COMMAND
WASHINGTON NAVY YARD, WASHINGTON D.C.
ROICC
NAVAL RESEARCH LABORATORY
DISTRICT OF COLUMBIA
RENOVATION OF BUILDING A69
WASHINGTON, D.C.
FIRST FLOOR PLAN - PLUMBING

CODE ID. NO. 80091 | SIZE D
SCALE: 1/8"=1'-0"
MAXIMO NO. JPXMY
STA. PROJ. NO. 855305
WORK ORDER NO. 0010
CONSTR. CONTR. NO.

NAVFAC DRAWING NO. 13022571
SHEET 71 OF 93
P2.1

DRAWFORM REVISION: 01 MAY 2006

REVDATE: FILE NAME: I:\5777-09\5-Drawings\5777P2.1.dwg LAYOUT NAME: P1.1 PLOTTED: Tuesday, July 06, 2010 - 11:17am

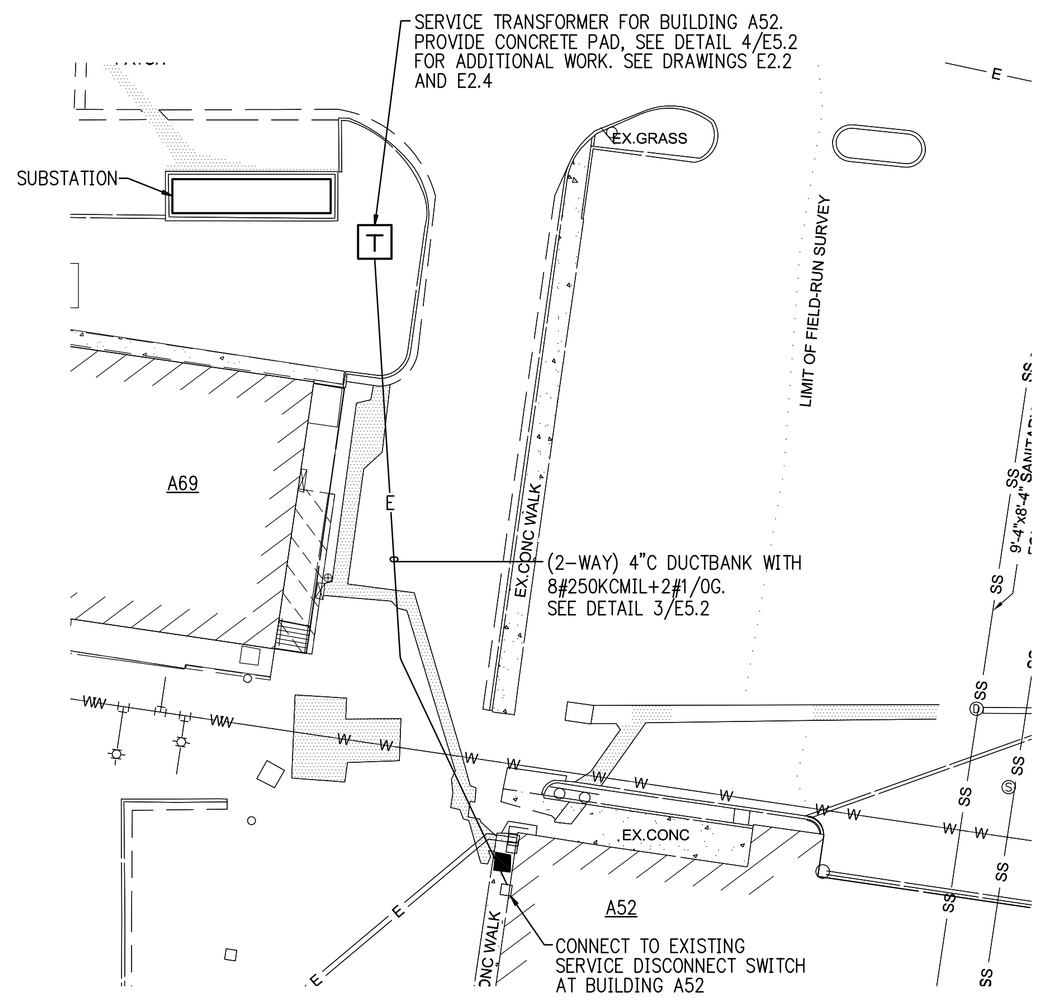

PART SITE PLAN

SCALE: 1"=20'-0"

NORTH

ELECTRICAL SYMBOLS AND ABBREVIATIONS

LIGHTING

- CEILING OUTLET AND LIGHTING FIXTURE, TYPE AS DESIGNATED.
- WALL OUTLET AND LIGHTING FIXTURE, TYPE AS DESIGNATED.
- WALL OUTLET AND LIGHTING FIXTURE ON EMERGENCY POWER, TYPE AS DESIGNATED.
- CEILING OUTLET AND FLUORESCENT LIGHTING FIXTURE, TYPE AS DESIGNATED.
- CEILING OUTLET WITH 2'x4' FLUORESCENT LIGHTING FIXTURE, TYPE AS DESIGNATED.
- B — EMERGENCY BATTERY LIGHTING UNIT, CEILING MOUNTED 7'-6" A.F., TYPE AS SPECIFIED.
- CEILING MOUNTED EXIT SIGN WITH OR WITHOUT DIRECTIONAL ARROWS AS INDICATED. SHADED AREA INDICATES STENCIL FACE.

POWER

- ELECTRIC PANELBOARD (120/208V). SURFACE OR FLUSH MOUNTED AS INDICATED
- ELECTRIC PANELBOARD (277/480V). SURFACE OR FLUSH MOUNTED AS INDICATED
- CB — ENCLOSED CIRCUIT BREAKER
- D — SAFETY SWITCH DISCONNECT. RATED FULL HORSEPOWER AS REQUIRED UNLESS OTHERWISE NOTED.
- DUPLEX GROUNDING TYPE CONVENIENCE RECEPTACLE 18" A.F. UNLESS OTHERWISE NOTED.
- G — DUPLEX RECEPTACLE, GROUND-FAULT INTERRUPTER.
- DUPLEX GROUNDING TYPE CONVENIENCE RECEPTACLE 8" ABOVE COUNTER OR 48" A.F.
- 2 — QUADRUPLEX (DOUBLE DUPLEX) GROUNDING TYPE CONVENIENCE RECEPTACLE 18" A.F.
  - WHERE SHOWN NUMBER DENOTES CIRCUIT NUMBER
- 2P-3W-20A-250V GROUNDING TYPE RECEPTACLE, 18" A.F. UNLESS OTHERWISE NOTED.
- DUPLEX GROUNDING TYPE RECEPTACLE IN CONDULET BOX AND CONDUIT STUB UP 6"AF UON.
- J TL — TWIST LOCK RECEPTACLE MOUNTED 12'-0"AF UON.
- TL — TWIST LOCK RECEPTACLE NEMA L5-20R.
- J — JUNCTION BOX W/ BLANK COVER PLATE.
- SPECIAL OUTLET OR CONNECT TO EQUIPMENT AS NOTED.
- ELECTRIC MOTOR.
- T — TRANSFORMER
- CC — SOLAR CIRCUIT COMBINER.
- GROUND RODS.
- G — CABLE TO CABLE GROUND SYSTEM CONNECTION.
- CB CB — MULTI-OUTLET ASSEMBLY WITH CIRCUIT BREAKERS AND OUTLETS MOUNT 24"AF UON. SEE DETAIL 1/E5.1.
- CONDUIT SLEEVE.
- DROP CORD REEL.

WIRING

- CONDUIT & WIRING CONCEALED IN WALL OR CEILING SPACE.
- G — GROUND RING CONDUCTOR – #4/0 BARE COPPER MINIMUM 36" BELOW GRADE.
- G — GROUNDING BUSBAR – 1/4"X20"LONG X 4"WIDE COPPER BAR ON INSULATORS – MOUNTED 18"AF, SEE DETAIL 3/E5.1.
- T — UNDERGROUND COMMUNICATION DUCTBANK. (2-WAY) 4"C CONCRETE ENCASED, UON. SEE DETAIL 3/E5.2.
- E — UNDERGROUND ELECTRIC SERVICE DUCTBANK. (4-WAY) 4"C CONCRETE ENCASED, UON. SEE DETAIL 2/E5.2.
- F — UNDERGROUND FIRE ALARM DUCTBANK (2-WAY) 4"C. CONCRETE ENCASED, UON. SEE DETAIL 3/E5.2.
- MULTI-OUTLET ASSEMBLY WITH RECEPTACLES AND DATA OUTLETS AS INDICATED. MOUNT 18"AF UON.
- HOMERUN TO PANELBOARD. NUMBER OF ARROWS INDICATES NUMBER OF CIRCUITS. NUMBER OF HASH MARKS INDICATES NUMBER OF CONDUCTORS. WHERE NO HASH MARKS APPEAR, TWO CONDUCTORS PLUS GROUND ARE IMPLIED.
- S — SINGLE POLE TOGGLE SWITCH, 48" A.F.
- S_3 — THREE-WAY TOGGLE SWITCH, 48" A.F.
- S_M — MANUAL MOTOR STARTER SWITCH W/ OVERLOAD PROTECTION, 48" A.F.
- TVSS — TRANSIENT VOLTAGE SURGE SUPPRESSOR.
- DATA/COMMUNICATIONS OUTLET, 18" A.F. SEE DETAIL 1/E5.3.
- SWITCH
- FUSE
- M — METER
- TRANSFORMER
- CURRENT TRANSFORMER (CT)
- CIRCUIT BREAKER

ABBREVIATIONS

A AMP	AMPERE
AF	ABOVE FLOOR
AHU	AIR HANDLING UNIT
C	CONDUIT
CT	CURRENT TRANSFORMER
CUH	CABINET UNIT HEATER
DWG	DRAWING
EC	EMPTY CONDUIT
EF	EXHAUST FAN
FA	FIRE ALARM
G, GRD	GROUND
GFI	GROUND FAULT INTERRUPTER
HP	HORSEPOWER
JB	JUNCTION BOX
KW	KILOWATT
MCB	MAIN CIRCUIT BREAKER
MOA	MULTIPE OUTLET ASSEMBLY
NTS	NOT TO SCALE
OC	ON CENTER
PUH	PROPELLER UNIT HEATER
PV	PHOTOVOLTAIC
SMR	SURFACE METAL RACEWAY
TL	TWIST-LOCK
TTB	TELEPHONE TERMINAL BOARD
TYP	TYPICAL
UON	UNLESS OTHERWISE NOTED
V	VOLT
VFD	VARIBLE FREQUENCY DRIVE
WP	WEATHERPROOF
XFMR	TRANSFORMER

20 10 0 20 40

SCALE: 1" = 20'-0"

07/09/10

CAUTION: IF SHEET IS LESS THAN 36" X 24" USE GRAPHIC SCALE

SYM	DESCRIPTION	DATE	APPR.

NAVFAC

MCA MARSHALL CRAFT ASSOCIATES

Marshall-Craft Associates, Inc.
Architecture / Interior Design / Planning
6112 York Road, Baltimore, Maryland 21212-2011
410.532.3131 Fax 410.532.3206

James Posey Associates
Mechanical & Electrical Engineers
Baltimore, MD
tel 410-265-6100
jamesposey.com

Comm. No. 5777-09 SEAL

DES | DRW
REVIEWED BY
PM/DM
CHIEF ENG/ARCH

DEPARTMENT OF THE NAVY
NAVAL FACILITIES ENGINEERING COMMAND
WASHINGTON NAVY YARD, WASHINGTON D.C.
NAVFAC
ROICC
NAVAL RESEARCH LABORATORY
DISTRICT OF COLUMBIA
RENOVATION OF BUILDING A69
WASHINGTON, D.C.
PART SITE PLAN, SYMBOLS LIST AND ABBREVIATIONS

CODE ID. NO. 80091 | SIZE D
SCALE: 1"=20'-0"
MAXIMO NO. JPXMY
STA. PROJ. NO. 855305
WORK ORDER NO. 0010
CONSTR. CONTR. NO.

NAVFAC DRAWING NO. 13022574

SHEET 74 OF 93

E0.1

DRAWFORM REVISION: 01 MAY 2006

REVDATE: FILE NAME: I:\5777-09\5-Drawings\5777E0.1.dwg LAYOUT NAME: E0.1 PLOTTED: Tuesday, July 06, 2010 - 10:46am

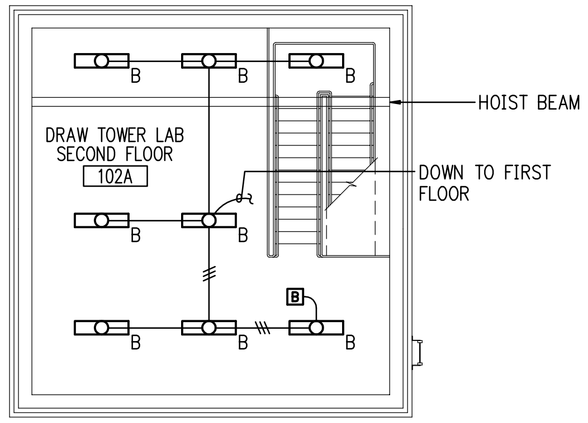

2 E2.1 SECOND FLOOR PLAN
LIGHTING
SCALE: 1/8"=1'-0"

NORTH

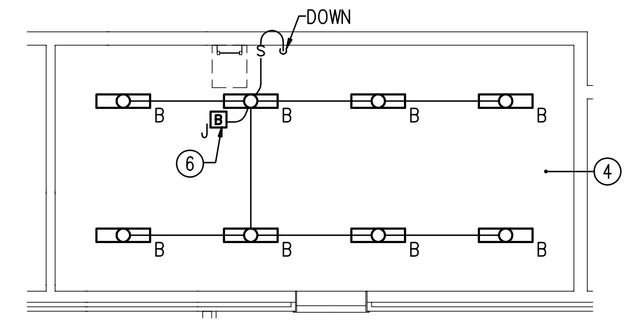

3 E2.1 UPPER LEVEL MECHANICAL ROOM
LIGHTING
SCALE: 1/8"=1'-0"

NORTH

SPECIFIC NOTES:

1. MOUNT FIXTURE TO STEEL CHANNEL SUPPORTS PROVIDED WITH AUTOCLAVE.
2. CONNECT TO RECEPTACLE CIRCUIT, REFER TO DRAWING E1.2.
3. PROVIDE SHOWER LIGHT FIXTURE AND SWITCH AS ADD ALTERNATE. BASE BID SHALL INCLUDE ROUGH ONLY FOR FIXTURE AND SWITCH.
4. COORDINATE LIGHTING FIXTURE LOCATIONS WITH MECHANICAL EQUIPMENT LAYOUT.
5. MOUNT 12" ABOVE WALKWAY OR STEPS.
6. CONNECT TO UNSWITCHED LIGHTING CIRCUIT.
7. MOUNT TO UNDERSIDE OF STEEL STRUCTURE.

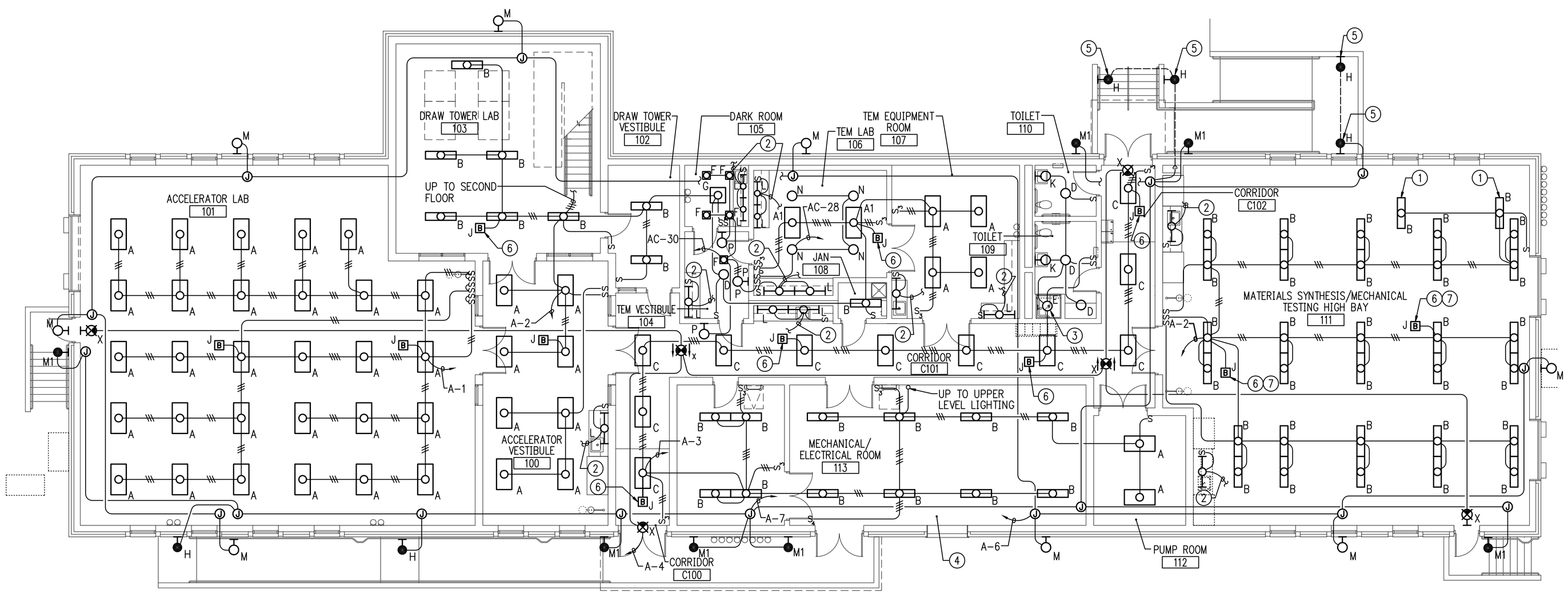

1 E2.1 FIRST FLOOR PLAN
LIGHTING
SCALE: 1/8"=1'-0"

NORTH

8 4 0 8 16
SCALE: 1/8" = 1'-0"

07/09/10

CAUTION: IF SHEET IS LESS THAN 36" X 24" USE GRAPHIC SCALE

SYM	DESCRIPTION	DATE	APPR.

NAVFAC

MCA MARSHALL CROFT ASSOCIATES
Marshall-Croft Associates, Inc.
Architecture | Interior Design | Planning
6112 York Road, Baltimore, Maryland 21212-2611
410.532.3131 Fax 410.532.3206

James Posey Associates
Mechanical & Electrical Engineers
Baltimore, MD
tel 410-265-6100
jamesposey.com

Comm. No. 5777-09 SEAL

DES | DRW
REVIEWED BY
PM/DM
CHIEF ENG/ARCH

DEPARTMENT OF THE NAVY
NAVAL FACILITIES ENGINEERING COMMAND
WASHINGTON NAVY YARD, WASHINGTON D.C.
NAVFAC
ROICC
NAVAL RESEARCH LABORATORY
DISTRICT OF COLUMBIA
RENOVATION OF BUILDING A69
WASHINGTON, D.C.
FIRST FLOOR PLAN - LIGHTING

CODE ID. NO. 80091 | SIZE D
SCALE: 1/8"=1'-0"
MAXIMO NO. JPXMY
STA. PROJ. NO. 855305
WORK ORDER NO. 0010
CONSTR. CONTR. NO.

NAVFAC DRAWING NO.
13022576

SHEET 76 OF 93

E2.1

DRAWFORM REVISION: 01 MAY 2006

REVDATE: FILE NAME: I:\5777-09\5-Drawings\5777E2.1.dwg LAYOUT NAME: E2.1 PLOTTER: Tuesday, July 06, 2010 - 10:47am

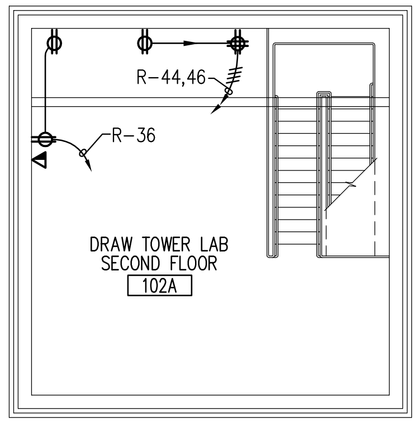

2 E2.2 SECOND FLOOR PLAN
POWER AND SYSTEMS
SCALE: 1/8"=1'-0"

NORTH

SPECIFIC NOTES:

1. PROVIDE 2P-30A-240V DISCONNECT SWITCH NON-FUSED, NEMA 1 ENCLOSURE. MOUNT AT HOIST BEAM. PROVIDE CONNECTION TO HOIST BEAM.
2. PROVIDE 3P-100A-600V DISCONNECT SWITCH NON-FUSED, NEMA 1 ENCLOSURE. MOUNT ON WALL ABOVE MOA.
3. CONNECT EACH DOUBLE DUPLEX RECEPTACLE TO A SEPARATE CIRCUIT.
4. PROVIDE RECEPTACLE NEMA L16-20R. MOUNT TO STEEL CHANNEL ATTACHED TO BOTTOM OF STEEL BUILDING JOIST.
5. CONNECT EACH TWISTLOCK RECEPTACLE TO A SEPARATE CIRCUIT.
6. PROVIDE 3#4+#8G IN 1 1/4"C AND CONNECT TO BOX FURNACE.
7. PROVIDE JUNCTION BOX AT 8'-0"AF AND PROVIDE CONNECTIONS TO HOOD LIGHTING, LIGHT SWITCH AND RECEPTACLES.
8. PROVIDE 3P-100A-600V DISCONNECT SWITCH FUSED AT 90A, NEMA 1 ENCLOSURE.
9. PROVIDE 3#2+#8G IN 1 1/2"C AND CONNECT TO AUTOCLAVE ELECTRIC SUPPLY BOX.
10. PROVIDE 3P-100A-600V DISCONNECT SWITCH NON-FUSED NEMA 1 ENCLOSURE.
11. PROVIDE (1) 8" CONDUIT CABLE PASS THROUGH WALL AT FLOOR. SEE DETAIL 2/E5.1.
12. FUTURE XFMR FOR TEM EQUIPMENT.
13. PROVIDE 2P-100A-240V DISCONNECT SWITCH NON-FUSED, NEMA 1 ENCLOSURE.
14. FUTURE WATER CHILLER FOR TEM EQUIPMENT.
15. PROVIDE 2P-30A-240V FUSED DISCONNECT SWITCH, FUSED AT 20A, NEMA 1 ENCLOSURE.
16. PROVIDE PREWIRED STEEL MULTIOUTLET MOA 4" ABOVE COUNTER BACKSPLASH. PROVIDE SINGLE OUTLETS 9" ON CENTER, ALTERNATELY WIRED.
17. PROVIDE NEMA L6-30R LOCKING RECEPTACLE SURFACE MOUNTED 24"AF.
18. PROVIDE CONNECTION TO MOTORIZED WINDOW SHADES. PROVIDE CONDUIT AND WIRES TO CONTROL SWITCH AS REQUIRED BY SHADE MANUFACTURER.
19. PROVIDE DATA OUTLET 12'-0"AF.
20. PROVIDE 4"HIGH X6"WIDE CABLE PASS THROUGH WALL AT FLOOR. SEE DETAIL 2/E5.1.
21. PROVIDE DROP CORD REEL. SEE DETAIL 1/E5.2.
22. PROVIDE NEMA L18-30R RECEPTACLE IN MOA.
23. PROVIDE CONNECTION TO HEAT TAPE ON CHILLED WATER PIPING.
24. INSTALL SWITCH SUPPLIED WUTH WINDOW SHADES. MOUNT AT 48"AF.
25. REFER TO DETAIL 5/E5.2 FOR MOUNTING FOR BUSWAY.
26. REFER TO DRAWING E2.4 FOR ADDITIONAL WORK.

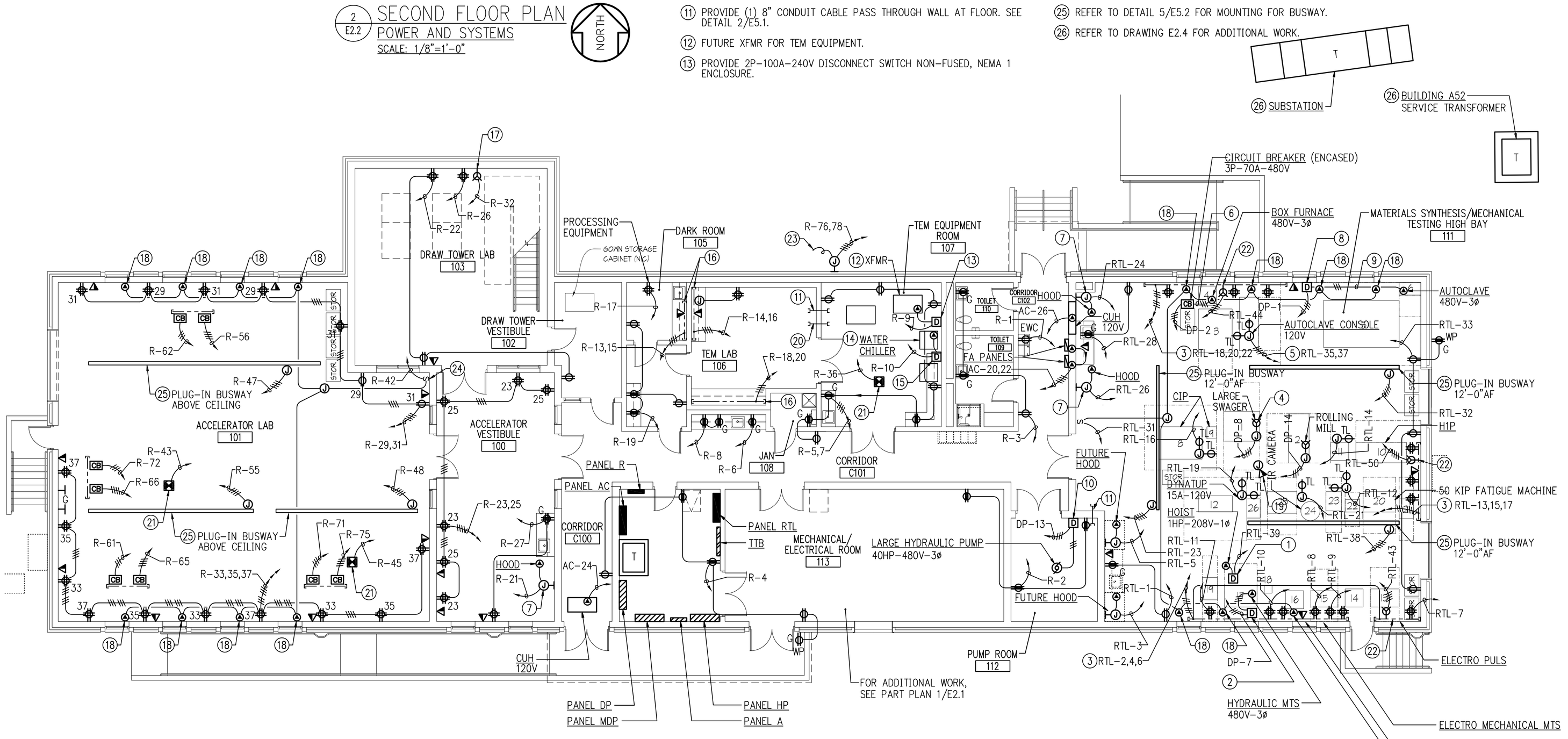

1 E2.2 FIRST FLOOR PLAN
POWER AND SYSTEMS
SCALE: 1/8"=1'-0"

8 4 0 8 16 07/09/10
SCALE: 1/8" = 1'-0"

CAUTION: IF SHEET IS LESS THAN 36" X 24" USE GRAPHIC SCALE

SYM	DESCRIPTION	DATE	APPR.

NAVFAC

MARSHALL CRAFT ASSOCIATES ARCHITECTS, INC.
Marshall Craft Associates, Inc.
Architecture | Interior Design | Planning
6112 York Road, Baltimore, Maryland 21212-2611
410.532.3131 Fax 410.532.3206

James Posey Associates
Mechanical & Electrical Engineers
Baltimore, MD
tel 410-265-6100
jamesposey.com

Comm. No. 5777-09 SEAL

DES | DRW
REVIEWED BY
PM/DM
CHIEF ENG/ARCH

DEPARTMENT OF THE NAVY
NAVFAC
ROICC
NAVAL FACILITIES ENGINEERING COMMAND
WASHINGTON NAVY YARD, WASHINGTON D.C.
NAVAL RESEARCH LABORATORY
DISTRICT OF COLUMBIA
RENOVATION OF BUILDING A69
WASHINGTON, D.C.
FIRST FLOOR PLAN - POWER AND SYSTEMS

CODE ID. NO. 80091 | SIZE D
SCALE: 1/8"=1'-0"
MAXIMO NO. JPXMY
STA. PROJ. NO. 855305
WORK ORDER NO. 0010
CONSTR. CONTR. NO.
NAVFAC DRAWING NO. 13022577
SHEET 77 OF 93
E2.2

DRAWFORM REVISION: 01 MAY 2006

REV/DATE: FILE NAME: I:\5777-09\5-Drawings\5777E2.2.dwg LAYOUT NAME: E2.2 PLOTTED: Tuesday, July 06, 2010 - 10:47am

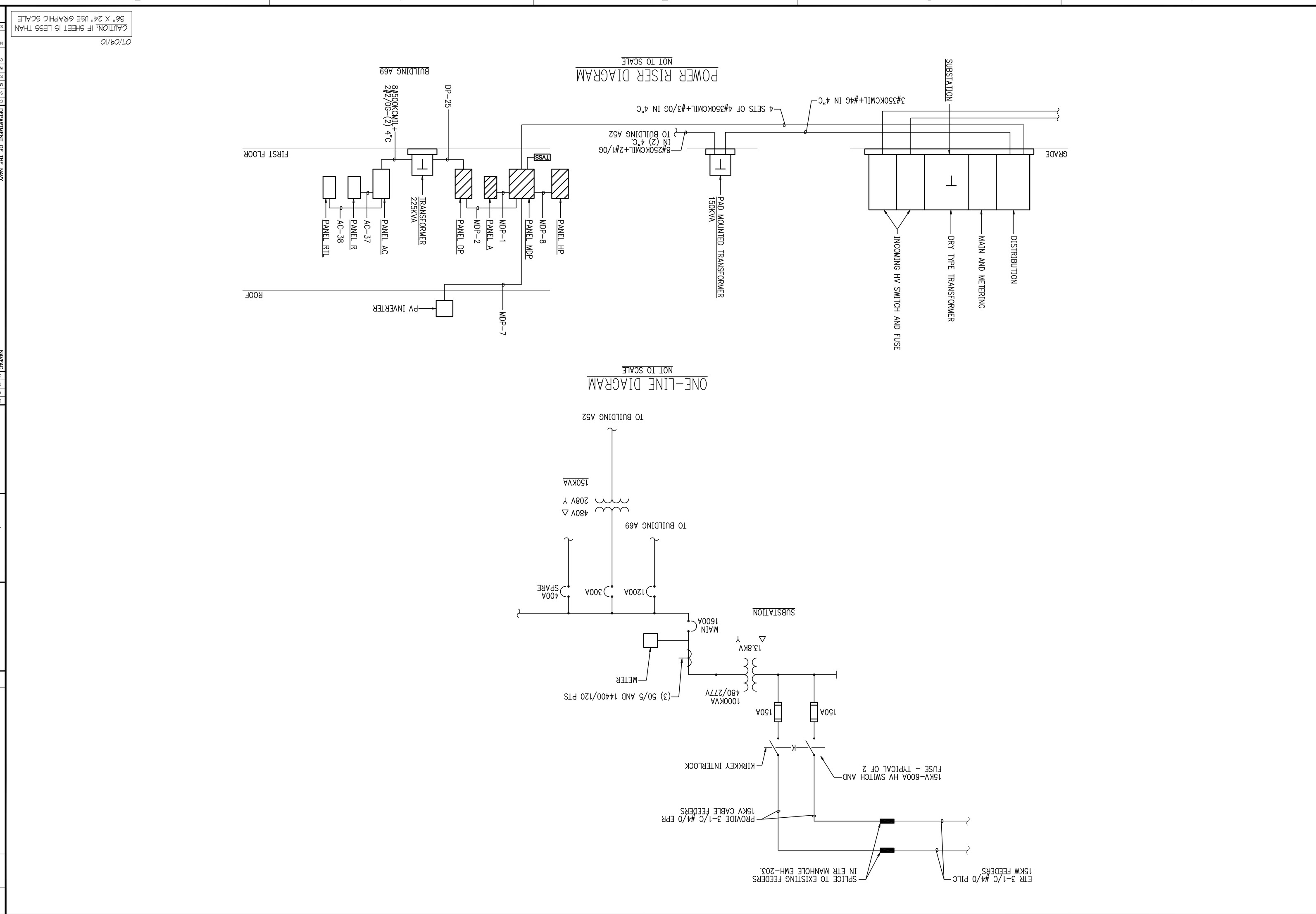

REVDATE: FILE NAME: I:\5777-09\5-Drawings\5777E5.4.dwg LAYOUT NAME: E5.4 PLOTTED: Tuesday, July 06, 2010 - 10:51am

07/09/10

CAUTION: IF SHEET IS LESS THAN 36" X 24" USE GRAPHIC SCALE

DEPARTMENT OF THE NAVY
NAVAL FACILITIES ENGINEERING COMMAND
WASHINGTON NAVY YARD, WASHINGTON D.C.
NAVFAC

ROICC
NAVAL RESEARCH LABORATORY
DISTRICT OF COLUMBIA

RENOVATION OF BUILDING A69

WASHINGTON, D.C.

DIAGRAMS

CODE ID. NO. 80091	SIZE D
SCALE: NONE	
MAXIMO NO.	JPXMY
STA. PROJ. NO.	855305
WORK ORDER NO.	0010
CONSTR. CONTR. NO.	
NAVFAC DRAWING NO.	13022584
SHEET	84 OF 93

E5.4

DEPARTMENT REVISION: 01 MAY 2006

DES	DRW
REVIEWED BY	
PM/DM	
CHIEF ENG/ARCH	

Comm. No. 5777-09 SEAL

MARSHALL CRAFT ASSOCIATES
Mechanical & Electrical Engineers
Baltimore, MD
tel 410-265-6100
jamesposey.com

James Posey Associates
Mechanical & Electrical Engineers
Baltimore, MD
tel 410-265-6100
jamesposey.com

NAVFAC

SYM	DESCRIPTION	DATE	APPR

WIRING PANEL SCHEDULE MDP

277 / 480 VOLTS — 3 PHASE 4 WIRE — 1200 AMP MAINS — SURFACE MOUNTED

CIR-CUIT	POLE	DESCRIPTION	WIRE/ CONDUIT	BREAKER POLE	BREAKER AMP	KVA / Ø AØ		BØ		CØ		CIR-CUIT	POLE	DESCRIPTION	WIRE/ CONDUIT	BREAKER POLE	BREAKER AMP
1	1	PANEL A	4 #2 +	3	100	5	183					2	2	PANEL DP	4#500 +	3	400
	3		#8 G.					3	195				4		#3 G.		
	5		1 1/2" C.							3	188		6		4" C.		
7	7	PV INVERTER	4 #10 +	3	30	-	35					8	8	PANEL HP	8#250 +	3	500
	9		#10 G.					-	35				10		#2 G.		
	11		1 " C.							-	35		12		(2) 21/2" C.		
13	13	SPARE		3	20	-	-					14	14	ACCEL	4 #2 +	3	80
	15							-	-				16		#8 G.		
	17									-	-		18		1 1/2" C.		
19	19	SPACE AND PROVISIONS		3		-	-					20	20	TVSS	3 #8 +	3	30
	21							-	-				22		#8 G.		
	23									-	-		24		1 " C.		
25	25	SPACE AND PROVISIONS		3		-	-					26	26	SPACE AND PROVISIONS		3	
	27							-	-				28				
	29									-	-		30				
						.5	217	3	230	3	223						
						223		233		225							

CONNECTED LOAD = 680.5 KVA

DEMAND LOAD = 544.4 KVA

MIN AIC RATING = 65,000 AMPS SYMMETRICAL

MAIN BREAKER 1200 AMPS

NOTE 1. CIRCUIT NO. 7 BREAKER SHALL BE SPARE UNDER BASE BID.

SERVICE ENTRANCE LABEL

LOCATION ELECTRIC ROOM

WIRING PANEL SCHEDULE A

277 / 480 VOLTS — 3 PHASE 4 WIRE — 100 AMP MAINS — SURFACE MOUNTED

CIR-CUIT	POLE	DESCRIPTION	WIRE/ CONDUIT	BREAKER POLE	BREAKER AMP	KVA / Ø AØ		BØ		CØ		CIR-CUIT	POLE	DESCRIPTION	WIRE/ CONDUIT	BREAKER POLE	BREAKER AMP
1	1	ACCEL. LAB LIGHTING	#12 - 3/4" C.	1	20	2.8	2.1					2	2	TEST BAY LTG	#12 - 3/4" C.	1	20
3	3	TEM, TOWER, LIGHTING	#12 - 3/4" C.	1	20			2.6	0.1			4	4	EXITS	#12 - 3/4" C.	1	20
5	5	CORRIDOR, MECH RM LTG	#12 - 3/4" C.	1	20					1.9	0.8	6	6	EXTERIOR LTG	#12 - 3/4" C.	1	20
7	7	SPARE		1	20	-	0.4					8	8	EXTERIOR LTG	#12 - 3/4" C.	1	20
9	9	SPARE		1	20			-	-			10	10	SPARE		1	20
11	11	SPARE		1	20					-	-	12	12	SPARE		1	20
13	13	SPACE AND PROVISIONS				-	-					14	14	SPACE AND PROVISIONS			
15	15	SPACE AND PROVISIONS						-	-			16	16	SPACE AND PROVISIONS			
17	17	SPACE AND PROVISIONS								-	-	18	18	SPACE AND PROVISIONS			
19	19	SPACE AND PROVISIONS				-	-					20	20	SPACE AND PROVISIONS			
21	21	SPACE AND PROVISIONS						-	-			22	22	SPACE AND PROVISIONS			
23	23	SPACE AND PROVISIONS								-	-	24	24	SPACE AND PROVISIONS			
25	25	SPACE AND PROVISIONS				-	-					26	26	SPACE AND PROVISIONS			
27	27	SPACE AND PROVISIONS						-	-			28	28	SPACE AND PROVISIONS			
29	29	SPACE AND PROVISIONS								-	-	30	30	SPACE AND PROVISIONS			
						2.8	2.5	2.6	0.1	1.9	0.8						
						5.3		2.7		2.7							

CONNECTED LOAD = 10.7 KVA

DEMAND LOAD = 10.7 KVA

MIN AIC RATING = 14,000 AMPS SYMMETRICAL

MAIN LUGS ONLY

LOCATION ELEC. RM.

WIRING PANEL SCHEDULE HP

277/480 VOLTS — 3 PHASE 4 WIRE — 800 AMP MAINS — SURFACE MOUNTED

CIR-CUIT	POLE	DESCRIPTION	WIRE/ CONDUIT	BREAKER POLE	BREAKER AMP	KVA / Ø AØ		BØ		CØ		CIR-CUIT	POLE	DESCRIPTION	WIRE/ CONDUIT	BREAKER POLE	BREAKER AMP
1	1	AHU - 1	3 #10 +	3	30	3.7	1.3					2	2	PUMP P-3	3 #12 +	3	15
	3	10 HP	#10 G.					3.7	1.3				4	3 HP	#12 G.		
	5		3/4" C.							3.7	1.3		6		3/4" C.		
7	7	AHU - 3	3 #10 +	3	25	2.9	1.3					8	8	PUMP P-4	3 #12 +	3	15
	9	7.5 HP	#12 G.					2.9	1.3				10	3 HP	#12 G.		
	11		3/4" C.							2.9	1.3		12		3/4" C.		
13	13	AHU - 4	3 #10 +	3	30	3.7	2.0					14	14	PUMP P-1	3 #12 +	3	15
	15	10 HP	#10 G.					3.7	2.0				16	5 HP	#12 G.		
	17		3/4" C.							3.7	2.0		18		3/4" C.		
19	19	AHU - 5	3 #10 +	3	25	2.9	2.0					20	20	PUMP P-2	3 #12 +	3	15
	21	7.5 HP	#12 G.					2.9	2.0				22	5 HP	#12 G.		
	23		3/4" C.							2.9	2.0		24		3/4" C.		
25	25	LAB COMP. AIR	3 #8 +	3	60	7.2	0.9					26	26	PUMP P-5	3 #12 +	3	15
	27		#10 G.					7.2	0.9				28	2 HP	#12 G.		
	29		1" C.							7.2	0.9		30		3/4" C.		
31	31	SPARE		3	20	-	0.9					32	32	PUMP P-6	3 #12 +	3	15
	33							-	0.9				34	2 HP	#12 G.		
	35									-	0.9		36		3/4" C.		
37	37	AHU-2 - ALTERNATE	3 #12 +	3	15	2.0	1.3					38	38	COND. PUMP	3 #12 +	3	15
	39	5 HP	#12 G.					2.0	1.3				40	2 - 1.5 HP	#12 G.		
	41		3/4" C.							2.0	1.3		42		3/4" C.		
43	43	EF - 1 AND 2	3 #10 +	3	25	2.6	-					44	44	SPARE		3	20
	45		#12 G.					2.6	-				46				
	47		3/4" C.							2.6	-		48				
49	49	SPACE AND PROV.				-	-					50	50	SPACE AND PROV.			
51	51	SPACE AND PROV.						-	-			52	52	SPACE AND PROV.			
53	53	SPACE AND PROV.								-	-	54	54	SPACE AND PROV.			
55	55	SPACE AND PROV.				-	-					56	56	SPACE AND PROV.			
57	57	SPACE AND PROV.						-	-			58	58	SPACE AND PROV.			
59	59	SPACE AND PROV.								-	-	60	60	SPACE AND PROV.			
						25.0	9.7	25.0	9.7	25.0	9.7						
						34.7		34.7		34.7							

CONNECTED LOAD = 104.1 KVA

DEMAND LOAD = 83.3 KVA

MIN AIC RATING = 14,000 AMPS SYMMETRICAL

MAIN LUGS ONLY

LOCATION ELEC. RM.

WIRING PANEL SCHEDULE AC

120 / 208 VOLTS — 3 PHASE 4 WIRE — 800 AMP MAINS — SURFACE MOUNTED

CIR-CUIT	POLE	DESCRIPTION	WIRE/ CONDUIT	BREAKER POLE	BREAKER AMP	KVA / Ø AØ		BØ		CØ		CIR-CUIT	POLE	DESCRIPTION	WIRE/ CONDUIT	BREAKER POLE	BREAKER AMP
1	1	ACCEL	4 #4/0 +	3	200	10.0	-					2	2	SPARE		1	20
3	3		#4 G.					10.0	-			4	4	SPARE		1	20
5	5		2 1/2" C.							10.0	-	6	6	SPARE		1	20
7	7	SPARE		1	20	-	0.9					8	8	FCU	#12 - 3/4" C.	1	20
9	9	SPARE		1	20			-	1.0			10	10	ATC	#12 - 3/4" C.	1	20
11	11	SPARE		1	20					-	1.0	12	12	ATC	#12 - 3/4" C.	1	20
13	13	SPARE		1	20	-	1.8					14	14	MECH EQUIP	#12 - 3/4" C.	1	20
15	15	SPARE		1	20			-	0.6			16	16	WATER TREAT.	#12 - 3/4" C.	1	20
17	17	ROOF RECEPT.	#12 - 3/4" C.	1	20					0.2	1.8	18	18	MECH EQUIP	#12 - 3/4" C.	1	20
19	19	EF - 3	#12 - 3/4" C.	1	15	0.9	-					20	20	FA PANEL	#12 - 3/4" C.	1	20
21	21	EF - 4	#12 - 3/4" C.	1	15			0.9	-			22	22	FA PANEL	#12 - 3/4" C.	1	20
23	23	PUH	#12 - 3/4" C.	1	15					0.2	0.2	24	24	CUH	#12 - 3/4" C.	1	20
25	25	PUMP	#12 - 3/4" C.	1	15	0.7	0.2					26	26	CUH	#12 - 3/4" C.	1	20
27	27	PUMP	#12 - 3/4" C.	1	15			0.7	1.5			28	28	TEM DNLIGHTS	#12 - 3/4" C.	1	20
29	29	WATER HEATER	#12 - 3/4" C.	1	20					0.2	1.8	30	30	DARK RM LTS	#12 - 3/4" C.	1	20
31	31	SPACE AND PROV.				-	-					32	32	SPACE AND PROV.			
33	33	SPACE AND PROV.						-	-			34	34	SPACE AND PROV.			
35	35	SPACE AND PROV.								-	-	36	36	SPACE AND PROV.			
37	37	PANEL R	4 #250 +	3	250	53.6	46.6					38	38	PANEL RTL	4 #500 +	3	350
39	39		#4 G.					65.6	47.1			40	40		#3 G.		
41	41		2 1/2" C.							61.7	44.1	42	42		4" C.		
						65.2	49.5	77.2	50.2	72.3	46.9						
						114.7		127.4		121.2							

CONNECTED LOAD = 363.3 KVA

DEMAND LOAD = 163.8 KVA

MIN AIC RATING = 10,000 AMPS SYMMETRICAL

MAIN BREAKER 700 AMPS

LOCATION ELEC RM.

MDP	A
HP	AC

07/09/10

CAUTION: IF SHEET IS LESS THAN 36" X 24" USE GRAPHIC SCALE

APPR. | DATE | DESCRIPTION | SYM

NAVFAC

MARSHALL CROFT ASSOCIATES
Marshall Croft Associates, Inc.
Architecture / Interior Design / Planning
6112 York Road, Baltimore, Maryland 21212-2611
410.532.3131 Fax 410.532.3206

James Posey Associates
Mechanical & Electrical Engineers
Baltimore, MD
tel 410-265-6100
jamesposey.com

Comm. No. 5777-09 SEAL

DES | DRW
REVIEWED BY
PM/DM
CHIEF ENG/ARCH

NAVFAC
DEPARTMENT OF THE NAVY
NAVAL FACILITIES ENGINEERING COMMAND
WASHINGTON NAVY YARD, WASHINGTON D.C.
ROICC
NAVAL RESEARCH LABORATORY
DISTRICT OF COLUMBIA
RENOVATION OF BUILDING A69
WASHINGTON, D.C.
SCHEDULES

CODE ID. NO. 80091 | SIZE D
SCALE: NONE
MAXIMO NO. JPXMY
STA. PROJ. NO. 855305
WORK ORDER NO. 0010
CONSTR. CONTR. NO.
NAVFAC DRAWING NO. 13022587
SHEET 87 OF 93

E6.1

DRAWFORM REVISION: 01 MAY 2006

REVDATE: FILE NAME: I:\5777-09\5-Drawings\5777E6.1.dwg LAYOUT NAME: Work PLOTTED: Tuesday, July 06, 2010 - 10:53am

WIRING PANEL SCHEDULE DP

277 / 480 VOLTS 3 PHASE 4 WIRE 800 AMP MAINS SURFACE MOUNTED

CIR-CUIT	POLE	DESCRIPTION	WIRE/ CONDUIT	BREAKER POLE	BREAKER AMP	KVA / Ø AØ		BØ		CØ		CIR-CUIT	POLE	DESCRIPTION	WIRE/ CONDUIT	BREAKER POLE	BREAKER AMP
1	1	AUTOCLAVE	4 #2 +	3	100	21.0	16.0					2	2	BOX FURNACE	4 #4 +	3	70
	3		#8 G.					21.0	16.0				4		#8 G.		
	5		1 1/2" C.							20.0	16.0		6		1 1/4" C.		
7	7	HYDRAULIC MTS	4 #2 +	3	100	8.0	4.4					8	8	LARGE SWAGER	4 #12 +	3	20
	9		#8 G.					8.0	4.4				10		#12 G.		
	11		1 1/2" C.							8.0	4.4		12		3/4" C.		
13	13	LARGE HYD. PUMP	4 #2 +	3	60	14.0	4.4					14	14	ROLLING MILL	4 #12 +	3	20
	15		#8 G.					14.0	4.4				16		#12 G.		
	17		1 1/2" C.							14.0	4.4		18		3/4" C.		
19	19	SPARE		3	20	-	-					20	20	SPARE		3	20
	21							-	-				22				
	23									-	-		24				
25	25	TRANSFORMER 225 KVA	3 #500 +	3	400	115	-					26	26	SPACE AND PROVISIONS		3	
	27	PANEL AC	#3 G.					127	-				28				
	29		4" C.							121	-		30				
						158	24.8	170	24.8	163	24.8						
						182.5		195.2		188.0							

CONNECTED LOAD = 565.7 KVA

DEMAND LOAD = 267.6 KVA

MIN AIC RATING = 14,000 AMPS SYMMETRICAL

MAIN LUGS ONLY

LOCATION ELEC. RM.

WIRING PANEL SCHEDULE R

120 / 208 VOLTS 3 PHASE 4 WIRE 400 AMP MAINS SURFACE MOUNTED

CIR-CUIT	POLE	DESCRIPTION	WIRE/ CONDUIT	BREAKER POLE	BREAKER AMP	KVA / Ø AØ		BØ		CØ		CIR-CUIT	POLE	DESCRIPTION	WIRE/ CONDUIT	BREAKER POLE	BREAKER AMP
1	1	EWC	#12 - 3/4" C.	1	20	1.0	0.6					2	2	RECEPTS PUMP RM	#12 - 3/4" C.	1	20
3	3	RECEPTS TOILET	#12 - 3/4" C.	1	20			0.6	1.0			4	4	RECEPTS ELEC RM	#12 - 3/4" C.	1	20
5	5	RECEPTS TEM	#12 - 3/4" C.	1	20					0.8	0.8	6	6	RECEPT CORRIDOR	#12 - 3/4" C.	1	20
7	7	RECEPTS TEM	#12 - 3/4" C.	1	20	0.8	0.8					8	8	RECEPT CORRIDOR	#12 - 3/4" C.	1	20
9	9	TEM XFMR		2	100			10.0	1.7			10	10	TEM WATER COOLOING		2	20
11										10.0	1.7		12				
13	13	TEM MOA GFI	#12 - 3/4" C.	1	20	0.8	0.8					14	14	TEM LAB MOA	#12 - 3/4" C.	1	20
15	15	TEM MOA GFI	#12 - 3/4" C.	1	20			1.5	0.8			16	16	TEM LAB MOA	#12 - 3/4" C.	1	20
17	17	DARK RM EQUIP	#12 - 3/4" C.	1						1.8	0.8	18	18	TEM LAB MOA	#12 - 3/4" C.	1	20
19	19	DARK RM RECEPT	#12 - 3/4" C.	1		0.8	0.8					20	20	TEM LAB MOA	#12 - 3/4" C.	1	20
21	21	HOOD	#12 - 3/4" C.	1				1.2	0.8			22	22	DT RECEPT	#12 - 3/4" C.	1	20
23	23	ACCEL VEST RECEPTS	#12 - 3/4" C.	1						0.8		24	24	SPARE		1	20
25	25	ACCEL VEST RECEPTS	#12 - 3/4" C.	1		0.8	0.8					26	26	DT RECEPT	#12 - 3/4" C.	1	20
27	27	ACCEL VEST RECEPTS	#12 - 3/4" C.	1				0.8				28	28	SPARE		2	30
29	29	ACCEL LAB	#12 - 3/4" C.	1	20					0.8			30				
31	31	ACCEL LAB	#12 - 3/4" C.	1	20	0.8	2.4					32	32	DT EQUIP		2	30
33	33	ACCEL LAB	#12 - 3/4" C.	1	20			0.8	2.4				34				
35	35	ACCEL LAB	#12 - 3/4" C.	1	20					0.8	1.2	36	36	DROP CORD	#12 - 3/4" C.	1	20
37	37	ACCEL LAB	#12 - 3/4" C.	1	20	0.8	-					38	38	SPARE		1	20
39	39	ACCEL EQUIP		2	50			6.0	-			40	40	SPARE		1	20
	41									6.0	0.2	42	42	WINDOW SHADES	#12 - 3/4" C.	1	20
43	43	ACCEL LAB DROP CORD	#12 - 3/4" C.	1	20	1.2	0.8					44	44	DT RECEPT	#12 - 3/4" C.	1	20
45	45	ACCEL LAB DROP CORD	#12 - 3/4" C.	1	20			1.2	0.8			46	46	DT RECEPT	#12 - 3/4" C.	1	20
47	47	PLUG-IN BUSWAY	4 #2 +	3	100					9.0	9.0	48	48	PLUG-IN BUSWAY	4 #2 +	3	100
	49		#8 G.			9.0	9.0						50		#8 G.		
	51		1 1/2" C.					9.0	9.0				52		1 1/2" C.		
53	53	SPARE		1	20					-	-	54	54	SPARE		1	20
55	55	RECEPTACLES	#12 - 3/4" C.	1	20	0.4	2.8					56	56	MOA OUTLET	4 #10 +	3	30
57	57	SPACE AND PROVISIONS						-	2.8				58		#10 G.		
59	59	SPACE AND PROVISIONS								-	2.8		60		1 " C.		
61	61	MOA OUTLET	#10 - 3/4" C.	2	30	2.5	2.5					62	62	MOA OUTLET	#10 - 3/4" C.	2	30
	63							2.5	2.5				64				
65	65	MOA OUTLET	4 #10 +	3	30					2.8	2.8	66	66	MOA OUTLET	4 #10 +	3	30
	67		#10 G.			2.8	2.8						68		#10 G.		
	69		1 " C.					2.8	2.8				70		1 " C.		
71	71	MOA OUTLET	#10 - 3/4" C.	2	30					2.5	2.5	72	72	MOA OUTLET	#10 - 3/4" C.	2	30
	73					2.5	2.5						74				
75	75	MOA OUTLET	4 #10 +	3	30			2.8	1.8			76	76	HEAT TAPE	#12 - 3/4" C.	1	20
	77		#10 G.							2.8	1.8	78	78	HEAT TAPE	#12 - 3/4" C.	1	20
	79		1 " C.			2.8	-					80	80	SPARE		1	20
81	81	SPARE		1	20			-	-			82	82	SPARE		1	20
83	83	SPARE		1	20					-	-	84	84	SPARE		1	20
						27.0	26.6	39.2	26.4	38.1	23.6						
						53.6		65.6		61.7							

CONNECTED LOAD = 180.9 KVA

DEMAND LOAD = 72.6 KVA

MIN AIC RATING = 10,000 AMPS SYMMETRICAL

MAIN LUGS ONLY

LOCATION ELEC. RM.

WIRING PANEL SCHEDULE RTL

120 / 208 VOLTS 3 PHASE 4 WIRE 400 AMP MAINS SURFACE MOUNTED

CIR-CUIT	POLE	DESCRIPTION	WIRE/ CONDUIT	BREAKER POLE	BREAKER AMP	KVA / Ø AØ		BØ		CØ		CIR-CUIT	POLE	DESCRIPTION	WIRE/ CONDUIT	BREAKER POLE	BREAKER AMP
1	1	RECEPT	#12 - 3/4" C.	1	20	0.8	0.8					2	2	MOA SOUTH	#12 - 3/4" C.	1	20
3	3	FUTURE HOOD	#12 - 3/4" C.	1	20			1.2	0.8			4	4	MOA SOUTH	#12 - 3/4" C.	1	20
5	5	FUTURE HOOD	#12 - 3/4" C.	1	20					1.2	0.8	6	6	MOA SOUTH	#12 - 3/4" C.	1	20
7	7	TEST BAY EQUIP	#12 - 3/4" C.	1	20	1.0	1.0					8	8	TEST BAY EQUIP	#12 - 3/4" C.	1	20
9	9	TEST BAY EQUIP	#12 - 3/4" C.	1	20			1.0	1.0			10	10	TEST BAY EQUIP	#12 - 3/4" C.	1	20
11	11	TEST BAY EQUIP	#12 - 3/4" C.	1	20					1.0	1.0	12	12	IR CAMERA	#12 - 3/4" C.	1	20
13	13	MOA - EAST	#12 - 3/4" C.	1	20	0.8	1.8					14	14	HIP	#12 - 3/4" C.	1	20
15	15	MOA - EAST	#12 - 3/4" C.	1	20			0.8	1.8			16	16	CIP	#12 - 3/4" C.	1	20
17	17	MOA - EAST	#12 - 3/4" C.	1	20					0.8	0.8	18	18	MOA NORTH	#12 - 3/4" C.	1	20
19	19	DYNATUP	#12 - 3/4" C.	1	15	1.8	0.8					20	20	MOA NORTH	#12 - 3/4" C.	1	15
21	21	100 KIP	#12 - 3/4" C.	1	20			1.8	0.8			22	22	MOA NORTH	#12 - 3/4" C.	1	20
23	23	PLUG-IN BUSWAY	4 #2 +	3	100					9.0	1.2	24	24	HOOD	#12 - 3/4" C.	1	20
	25		#8 G.			9.0	1.2					26	26	HOOD	#12 - 3/4" C.	1	20
	27		1 1/2" C.					9.0	0.8			28	28	RECEPT	#12 - 3/4" C.	1	20
29	29	SPARE		1	20					-	-	30	30	SPARE		1	20
31	31	WINDOW SHADES	#12 - 3/4" C.	1	20	0.2	9.0					32	32	PLUG-IN BUSWAY	4 #2 +	3	100
33	33	RECEPTS	#12 - 3/4" C.	1	20			0.8	9.0				34		#8 G.		
35	35	AUOTCLAVE CONTROL	#12 - 3/4" C.	1	20					1.0	9.0		36		1 1/2" C.		
37	37	AUOTCLAVE CONTROL	#12 - 3/4" C.	1	20	1.0	9.0					38	38	PLUG-IN BUSWAY	4 #2 +	3	100
39	39	HOIST		2	20			0.9	9.0				40		#8 G.		
41	41	1 HP								0.9	9.0		42		1 1/2" C.		
43	43	3 PHASE OUTLET	4 #10 +	3	30	2.8	2.8					44	44	3 PHASE OUTLET	4 #10 +	3	30
	45		#10 G.					2.8	2.8				46		#10 G.		
	47		1" C.							2.8	2.8		48		1" C.		
49	49	SPARE		1	20	-	2.8					50	50	3 PHASE OUTLET	4 #10 +	3	30
51	51	SPARE		1	20			-	2.8				52		#10 G.		
53	53	SPARE		1	20					-	2.8		54		1" C.		
55	55	SPARE		1	20	-	-					56	56	SPARE		1	20
57	57	SPARE		1	20			-	-			58	58	SPARE		1	20
59	59	SPARE		1	20					-	-	60	60	SPARE		1	20
						17.4	29.2	18.3	28.8	16.7	27.4						
						46.6		47.1		44.1							

CONNECTED LOAD = 137.8 KVA

DEMAND LOAD = 55.1 KVA

MIN AIC RATING = 10,000 AMPS SYMMETRICAL

MAIN LUGS ONLY

LOCATION ELEC RM

SCHEDULE OF VARIABLE FREQUENCY DRIVES

EQUIPMENT DESIGNATION	EQUIPMENT/SYSTEM DISCIPLINE	EQUIPMENT SERVING	MOTOR CHARACTERISTICS HP	MOTOR CHARACTERISTICS VOLTAGE/PHASE	DRIVE LOCATION	ENCLOSURE TYPE	BYPASS SWITCH	NOTES
VFD-1	MECHANICAL	AHU-1	7.5	480V-3Ø	MECH. UPPER	NEMA 12	YES	
VFD-2	MECHANICAL	AHU-3	5	480V-3Ø	MECH. UPPER	NEMA 12	YES	
VFD-3	MECHANICAL	AHU-4	7.5	480V-3Ø	MECH. UPPER	NEMA 12	YES	
VFD-4	MECHANICAL	PUMP 1	7.5	480V-3Ø	MECH. ROOM	NEMA 12	YES	
VFD-5	MECHANICAL	PUMP 2	7.5	480V-3Ø	MECH. ROOM	NEMA 12	YES	
VFD-6	MECHANICAL	PUMP 5	2	480V-3Ø	MECH. ROOM	NEMA 12	YES	
VFD-7	MECHANICAL	PUMP 6	2	480V-3Ø	MECH. ROOM	NEMA 12	YES	
VFD-8	MECHANICAL	AHU-5	10	480V-3Ø	MECH. ROOM	NEMA 12	YES	
VFD-9	MECHANICAL	PUMP 4	5	480V-3Ø	MECH. ROOM	NEMA 12	YES	
VFD-10	MECHANICAL	PUMP 3	5	480V-3Ø	MECH. ROOM	NEMA 12	YES	
VFD-11	MECHANICAL	AHU-2	5	480V-3Ø	MECH. UPPER	NEMA 12	YES	ALTERN.

DP	R
RTL	VFD

07/09/10

CAUTION: IF SHEET IS LESS THAN 36" X 24" USE GRAPHIC SCALE

APPR. DATE DESCRIPTION SYM

NAVFAC

MARSHALL CRAFT ASSOCIATES
Marshall-Craft Associates, Inc.
Architecture / Interior Design / Planning
6112 York Road, Baltimore, Maryland 21212-2611
410.532.3131 Fax 410.532.3206

James Posey Associates
Mechanical & Electrical Engineers
Baltimore, MD
tel 410-265-6100
jamesposey.com

Comm. No. 5777-09 SEAL

DES | DRW
REVIEWED BY
PM/DM
CHIEF ENG/ARCH

NAVFAC
DEPARTMENT OF THE NAVY
NAVAL FACILITIES ENGINEERING COMMAND
WASHINGTON NAVY YARD, WASHINGTON D.C.
ROICC
NAVAL RESEARCH LABORATORY
DISTRICT OF COLUMBIA
RENOVATION OF BUILDING A69
WASHINGTON, D.C.
SCHEDULES

CODE ID. NO. 80091 | SIZE D
SCALE: NONE
MAXIMO NO. JPXMY
STA. PROJ. NO. 855305
WORK ORDER NO. 0010
CONSTR. CONTR. NO.
NAVFAC DRAWING NO. 13022588
SHEET 88 OF 93
E6.2

DRAWFORM REVISION: 01 MAY 2006

REVDATE: FILE NAME: E:\5777-09\5-Drawings\5777E6.2.dwg LAYOUT NAME: Work PLOTTED: Tuesday, July 06, 2010 - 10:54am

CODE AND STANDARDS REFERENCES:

ALL REFERENCES TO NFPA 13 SHALL MEAN THE 2007 EDITION.
ALL REFERENCES TO NFPA 24 SHALL MEAN THE 2005 EDITION.
ALL REFERENCES TO NFPA 25 SHALL MEAN THE 2005 EDITION.
ALL REFERENCES TO NFPA 45 SHALL MEAN THE 2004 EDITION.
ALL REFERENCES TO NFPA 70 SHALL MEAN THE 2008 EDITION.
ALL REFERENCES TO NFPA 72 SHALL MEAN THE 2007 EDITION.
ALL REFERENCES TO NFPA 241 SHALL MEAN THE 2002 EDITION.
ALL REFERENCES TO IBC SHALL MEAN THE 2006 EDITION.
ALL REFERENCES TO UFC 3-600-01 SHALL MEAN THE 14 JULY 2009 EDITION.
ALL REFERENCES TO UFC 3-600-10N SHALL MEAN THE AUGUST 2007 EDITION.
ALL REFERENCES TO UFC 4-021-01 SHALL MEAN THE 9 APRIL 2008 EDITION.

ABBREVIATIONS

AFF	ABOVE FINISHED FLOOR	NO	NUMBER
ATR	ALL-THREAD ROD	OS&Y	OUTSIDE SCREW & YOKE
CL	CENTER LINE	PSI	POUNDS-PER-SQUARE INCH
CHR	CHROME	PAC	PERMIT APPLICATION CENTER
ELEV	ELEVATION	QR	QUICK-RESPONSE
EX	EXISTING	RN	RISER NIPPLE
FDC	FIRE DEPARTMENT CONNECTION	SCH	SCHEDULE
FHV	FIRE HOSE VALVE	SF	SQUARE FOOT
FF	FINISHED FLOOR	STD	STANDARD
FLR	FLOOR	TBD	TO BE DETERMINED
FM	FACTORY MUTUAL	TYP	TYPICAL
GPM	GALLONS-PER-MINUTE	UL	UNDERWRITERS LABORATORIES
MAX	MAXIMUM	UNO	UNLESS NOTED OTHERWISE
MIN	MINIMUM	W/	WITH

SPRINKLER SYSTEM DESIGN CRITERIA:

1. ALL AUTOMATIC SPRINKLER SYSTEMS SHALL BE HYDRAULICALLY DESIGNED AS FOLLOWS:
   - LIGHT HAZARD AREAS SHALL BE HYDRAULICALLY DESIGNED BASED ON A MINIMUM OF .10 GPM/SF OVER THE MOST REMOTE 3000 SF. MAXIMUM SPRINKLER HEAD SPACING SHALL BE 225 SF. HOSE STREAM ALLOWANCE SHALL BE 250 GPM (COMBINED).
   - ORDINARY HAZARD GROUP I AREAS SHALL BE HYDRAULICALLY DESIGNED BASED ON A MINIMUM OF .15 GPM/SF OVER THE MOST HYDRAULICALLY REMOTE 3000 SF. MAXIMUM SPRINKLER HEAD SPACING SHALL BE 130 SF. HOSE STREAM ALLOWANCE SHALL BE 500 GPM (COMBINED).
   - ORDINARY HAZARD GROUP II AREAS SHALL BE HYDRAULICALLY DESIGNED BASED ON A MINIMUM .20 GPM/SF OVER THE HYDRAULICALLY MOST REMOTE 3000 SF. MAXIMUM SPRINKLER HEAD SPACING SHALL BE 130 SF. HOSE STREAM ALLOWANCE SHALL BE 500 GPM (COMBINED).

   IF REQUIREMENTS OF NFPA 13, LOCAL OR STATE AUTHORITIES ARE MORE STRINGENT, THEN THOSE REQUIREMENTS SHALL TAKE PRECEDENCE.
2. SPRINKLER HEADS IN FINISHED CEILING AREAS SHALL BE CONCEALED QUICK RESPONSE HEADS WITH A WHITE FINISH. ALL SPRINKLERS SHALL BE INSTALLED IN ACCORDANCE WITH NFPA 13 AND CONTRACT SPECIFICATIONS UNO.
3. SPRINKLER HEADS IN UNFINISHED CEILING AREAS SHALL BE BRASS FINISH, UPRIGHT TYPE HEADS INSTALLED IN ACCORDANCE WITH NFPA 13 AND CONTRACT SPECIFICATIONS UNO.
4. GENERALLY PIPING SHALL BE CONCEALED ABOVE SUSPENDED CEILINGS IN FINISHED CEILING AREAS.
5. ALL FIRE SPRINKLER SYSTEM PIPING SHALL ADHERE TO THE FOLLOWING REQUIREMENTS:
   A. 2-INCH AND SMALLER – THREADED BLACK STEEL SCHEDULE 40
   B. 2 ½-INCH TO 4-INCH – ROLL OR CUT GROOVED BLACK STEEL SCHEDULE 40.
   C. 6-INCH TO LARGER – SCH 10 ROLL GROOVE
   D. BRANCHLINE OUTLETS AT MAIN PIPING SHALL BE SHOP-WELDED.
   E. ALL PIPING SHALL BE PROVIDED IN ACCORDANCE WITH NFPA 13.
6. ALL FITTINGS SHALL BE 175 WWP RATED.

FIRE PROTECTION LEGEND

SYMBOL	DESCRIPTION
	NEW FIRE SPRINKLER PIPING
	OS&Y GATE VALVE W/ VALVE TAMPER SUPERVISORY SWITCH
	CHECK VALVE
VT	VALVE TAMPER SUPERVISORY SWITCH
WF	WATERFLOW SWITCH
#	DRAWING NOTE NUMBER
XXX	NFPA 13 DESIGN LH, LIGHT HAZ; OH1, ORD. HAZ GRP I; OH2. ORD HAZ GRP II; EX 1, EXTRA HAZ. GRP I
	STORZ FDC
WP F	ELECTRIC SPRINKLER ALARM BELL SUBSCRIPT 'WP' DENOTES WEATHER-PROOF DEVICE

WATERFLOW INFORMATION

TEST LOCATION: HYDRANT AT BUILDING 222

STATIC:	60 PSI (HYD A)
RESIDUAL:	48 PSI (HYD A)
FLOW:	1838 GPM (HYD B)
DATE:	AUGUST 11, 2009
BY:	EBL ENGINEERS, LLC

FIRE SPRINKLER GENERAL NOTES:

1. PROVIDE A COMPLETE AND OPERATIONAL FIRE SPRINKLER SYSTEM. THE SYSTEM SHALL BE DESIGNED, FABRICATED, INSTALLED, COORDINATED, TESTED AND PLACED INTO SERVICE IN ACCORDANCE WITH NFPA 13, NFPA 24, NFPA 25, NFPA 45, NFPA 70, NFPA 72, NFPA 241, UNIFIED FACILITIES CRITERIA, LOCAL AND STATE CODES, APPLICABLE AMENDMENTS, AND THE CONTRACT DOCUMENTS.
2. THE GENERAL SCOPE OF THE AUTOMATIC FIRE SPRINKLER SYSTEM SHALL CONSIST OF THE FOLLOWING FOR ALL AREAS OF THE PROJECT AS SHOWN:
   A. PROVIDE WET PIPE SPRINKLER SYSTEMS AS SHOWN.
3. THE FIRE PROTECTION INSTALLER(S) SHALL SUBMIT COMPLETE LAYOUT SHOP DRAWINGS, CALCULATIONS, AND ANNOTATED MANUFACTURER'S DATA INFORMATION TO THE NAVFAC FIRE PROTECTION ENGINEER AND ENGINEER OF RECORD FOR REVIEW AND APPROVAL. APPROVALS SHALL BE OBTAINED BEFORE THE PURCHASE OR INSTALLATION OF EQUIPMENT.
4. THE FIRE PROTECTION INSTALLER(S) SHALL BE RESPONSIBLE FOR ALL APPLICABLE TRADE PERMITS, AND REQUESTS FOR INSPECTION AND TESTING AS REQUIRED BY THE NRL COTR.
5. THE FINAL DESIGN OF THE FIRE PROTECTION SYSTEM SHALL BE COORDINATED WITH FIELD CONDITIONS AND THE AVAILABLE AND FUTURE WATER SUPPLIES.
6. THE FIRE PROTECTION INSTALLER(S) SHALL COORDINATE ALL SYSTEM PIPING, DEVICES, CONDUIT, EQUIPMENT, AND RELATED APPURTENANCES WITH THE BUILDING STRUCTURAL, MECHANICAL AND ELECTRICAL ELEMENTS, INCLUDING BUT NOT LIMITED TO, STRUCTURAL MEMBERS AND SYSTEMS, AIR DUCTS AND OUTLETS, LIGHT FIXTURES, OVERHEAD CRANE, OVERHEAD DOORS AND SIMILAR EQUIPMENT AND MATERIAL THAT MAY INTERFERE WITH THE PROPER INSTALLATION AND OPERATION OF THE SYSTEM. SUBMITTED LAYOUT SHOP DRAWINGS SHALL BE COORDINATED WITH ALL TRADES.
7. THE FIRE PROTECTION SYSTEM PIPING, DEVICES, HANGERS, CABINETS, EQUIPMENT AND RELATED APPURTENANCES SHALL BE INSTALLED NEAT AND IN A WORKMANLIKE MANNER. CONFORM TO THE LATEST TRADE PRACTICES. PIPING SHALL BE ROUTED PARALLEL OR PERPENDICULAR TO BUILDING LINES AND PROPERLY MOUNTED/SECURED TO THE BUILDING STRUCTURE.
8. THE FIRE PROTECTION SYSTEM WORK SHALL BE COORDINATED WITH SPECIAL TRADES (ENERGY MANAGEMENT, COMPUTER DATA, ETC) AS APPLICABLE TO THE PROJECT.
9. THE TERM 'PROVIDE' MEANS TO FURNISH AND INSTALL COMPLETE AND READY FOR THE INTENDED USE.
10. THE FIRE SPRINKLER INSTALLER(S) SHALL PROVIDE ALL NECESSARY PARTS AND ACCESSORIES EVEN THOUGH THE PARTS AND ACCESSORIES ARE NOT SPECIFICALLY MENTIONED OR SHOWN WITHIN THE CONTRACT DOCUMENTS.
11. ALL FIRE SPRINKLER SYSTEM PIPING AND EQUIPMENT SHOWN ARE FOR SUGGESTIVE PURPOSES ONLY AND SHALL NOT BE SCALED.
12. ALL FIRE SPRINKLER VALVES SHALL BE SUPERVISED IN ACCORDANCE WITH NFPA 13 AND NFPA 72. ALL WIRING CONNECTIONS SHALL BE COORDINATED BY THE SPRINKLER INSTALLER AND MADE BY THE FIRE ALARM INSTALLER.
13. THE FIRE SPRINKLER PIPING SHALL BE SUBJECTED TO THE FOLLOWING TESTS:
    A: AIR PRESSURE TEST MIN. 2-HR.
    B: A HYDROSTATIC PRESSURE TEST IN ACCORDANCE WITH NFPA 13.
    C: PIPE FLUSHING
14. FIRE SPRINKLER PIPE HANGERS AND PIPE SUPPORTS SHALL BE PROVIDED IN ACCORDANCE WITH NFPA 13. ALL HANGER MATERIALS SHALL BE UL/FM LISTED AND SUPPORT THE LOADS PER NFPA 13.
15. ALL FLOOR AND WALL PENETRATIONS SHALL BE CORE DRILLED AND COORDINATED WITH THE BUILDING STRUCTURAL SYSTEM. UNO SLEEVES SHALL BE PROVIDED AT THE FLOOR AND/OR WALL PENETRATION IN ACCORDANCE WITH NFPA 13.
16. PROVIDE FIRE SPRINKLER SYSTEM ACCESS PANELS FOR VALVES AND/OR EQUIPMENT CONCEALED ABOVE HARD CEILINGS OR WALLS IN ACCORDANCE WITH NFPA 13. SEE ARCHITECTURAL DRAWINGS FOR FINISH SCHEDULE.
17. APPROVED IDENTIFICATION SIGNS FOR ALL SYSTEM COMPONENTS SHALL BE PROVIDED IN ACCORDANCE WITH NFPA 13 AND THE CONTRACT DOCUMENTS.

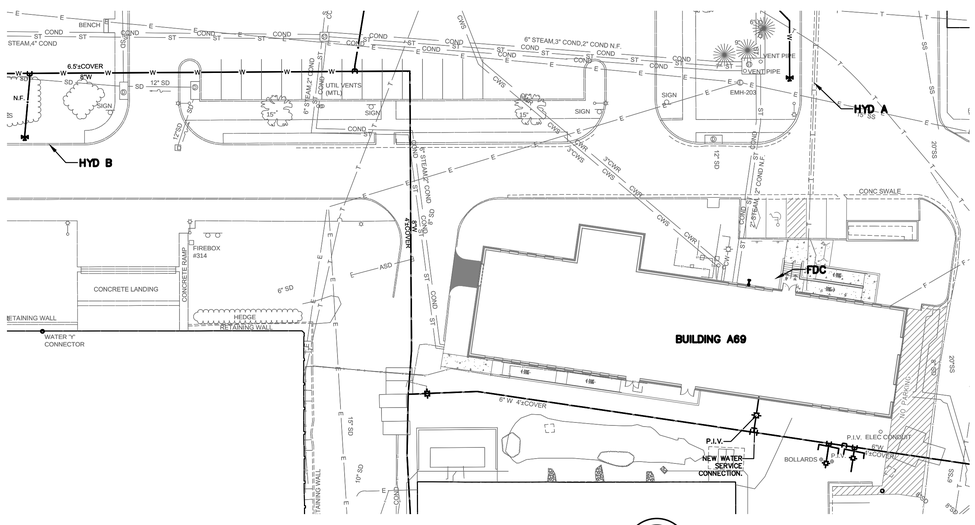

SITE PLAN

SCALE: 1/32" = 1'-0"

NOTE:
ALL PIPING AND HYDRANT LOCATIONS DEPICTED ON THIS PLAN ARE SHOWN FOR THE PURPOSE OF HYDRAULIC CALCULATIONS AND FIRE DEPARTMENT CONNECTION POSITION. THIS SITE PLAN IS NOT INTENDED FOR INSTALLATION OF PIPING AND/OR HYDRANT LOCATIONS.

07/09/10

CAUTION: IF SHEET IS LESS THAN 36" X 24" USE GRAPHIC SCALE

PROFESSIONAL CERTIFICATION:
I HEREBY CERTIFY THAT THESE DOCUMENTS WERE PREPARED OR APPROVED BY ME, AND THAT I AM A DULY LICENSED PROFESSIONAL ENGINEER UNDER THE LAWS OF THE STATE OF MARYLAND. LICENSE NUMBER: 15029
EXPIRATION DATE: 11/24/11

SYM	DESCRIPTION	DATE	APPR.

NAVFAC

MARSHALL CRAFT ASSOCIATES
Marshall-Craft Associates, Inc.
Architecture, Engineering, Planning
6112 York Road, Baltimore, Maryland 21212-2011
410.532.7777 Fax: 410.532.9206

EBL FIRE ENGINEERING
Division of EBL ENGINEERS, LLC
The Professional Engineering Center
8023 Harford Road, Baltimore, Maryland 21234-5700
(410) 882-1100 Fax: (410) 882-9001
e-mail: ebl@ebl-pc.com
Fire Protection • Life Safety • Code Compliance

SEAL

DES	DRW
REVIEWED BY	
PM/DM	
CHIEF ENG/ARCH	

DEPARTMENT OF THE NAVY
NAVAL FACILITIES ENGINEERING COMMAND
WASHINGTON NAVY YARD, WASHINGTON D.C.
ROICC
NAVAL RESEARCH LABORATORY
DISTRICT OF COLUMBIA

RENOVATION OF BUILDING A69
WASHINGTON, D.C.

FIRE PROTECTION LEGEND, NOTES & DETAILS

CODE ID. NO. 80091	SIZE D
SCALE:	AS NOTED
MAXIMO NO.	JPXMY
STA. PROJ. NO.	855305
WORK ORDER NO.	0010
CONSTR. CONTR. NO.	
NAVFAC DRAWING NO.	13022589
SHEET 89 OF 93	

FP1.0

DRAWFORM REVISION: 01 MAY 2006

REVDATE: FILE NAME: G:\projects\2009\09203.001\cadd\submission 100%\09203 FP1.0.dwg LAYOUT NAME: FP1.0 PLOTTED: Tuesday, July 06, 2010 - 9:15am

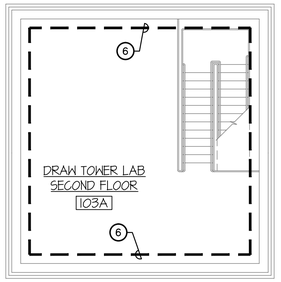

SECOND FLOOR PLAN – FIRE PROTECTION

SCALE: 1/8" = 1'-0"

GENERAL NOTES:

1. FOR FIRE PROTECTION DESIGN CRITERIA, GENERAL NOTES, LEGEND, AND SYMBOLS REFER TO SHEET FP1.0.
2. FOR FIRE PROTECTION DETAILS REFER TO FP6.0.
3. ALL AREAS TO BE DESIGNED BASED ON ORDINARY HAZARD GROUP II, UNO.
4. PROVIDE FIRE SPRINKLERS IN LAB HOODS AS REQUIRED PER NFPA 45.
5. PROVIDE DRY HORIZONTAL SPRINKLERS UNDER EXTERIOR CANOPIES AT BOTTLED STORAGE. REFER TO ARCHITECTURAL DRAWINGS FOR LOCATIONS.

DRAWING NOTES: (APPLIES TO THIS SHEET ONLY)

1. MIN 6" INCOMING SERVICE. SEE CIVIL DRAWINGS FOR CONTINUATION.
2. CONNECT TO 6" FLANGE LOCATED ABOVE FINISH FLOOR.
3. REFER TO RISER DETAIL ON FP6.0. COORDINATE WITH MECHANICAL EQUIPMENT.
4. MIN 6" TO WET PIPE SYSTEM.
5. MIN 4" FROM FDC.
6. PROVIDE HIGH TEMPERATURE (286°F) SPRINKLER HEADS.
7. 4½ STORZ FDC WITH INTEGRAL WALL PLATE AND SILCOCK. LOCATE AS CLOSE AS POSSIBLE TO FINISH FLOOR TO MAINTAIN MAX. 5'-0" MOUNTING HEIGHT FROM FINISHED GRADE.
8. MIN 4" TO RISER.
9. INSPECTOR'S TEST. REFER TO DETAIL ON FP6.0.
10. FROM SPRINKLER SYSTEM.
11. MIN 6" CAPPED PIPE BACKFLOW PREVENTION ASSEMBLY TEST HEADER. PROVIDE SIGN WITH MINIMUM 2" LETTERING.
12. ELECTRIC BELL. LOCATE DIRECTLY ABOVE AND IN-LINE WITH THE FDC. COORDINATE WITH THE FIRE ALARM/ELECTRICAL INSTALLER AND SHEET FA2.0.

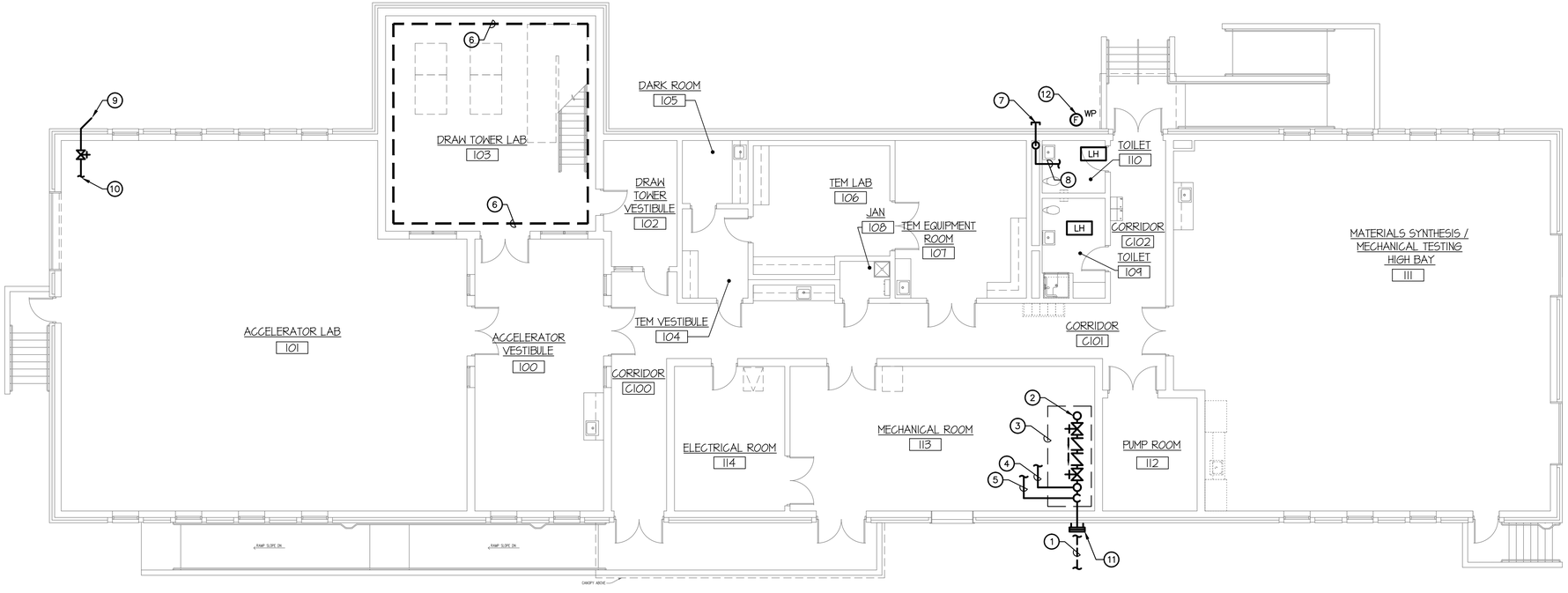

FIRST FLOOR PLAN – FIRE PROTECTION

SCALE: 1/8" = 1'-0"

0 1' 4' 8' 16' 24'

SCALE: 1/8" = 1'-0"

07/09/10

CAUTION: IF SHEET IS LESS THAN 36" X 24" USE GRAPHIC SCALE

PROFESSIONAL CERTIFICATION:
I HEREBY CERTIFY THAT THESE DOCUMENTS WERE PREPARED OR APPROVED BY ME, AND THAT I AM A DULY LICENSED PROFESSIONAL ENGINEER UNDER THE LAWS OF THE STATE OF MARYLAND, LICENSE NO. 27168
EXPIRATION DATE: 11/04/11

NAVFAC

MARSHALL CRAFT ASSOCIATES

Marshall Craft Associates, Inc.
Architecture • Interior Design • Planning
6112 York Road, Baltimore, Maryland 21212-2011
410.532.2121 Fax 410.532.3209

EBL FIRE ENGINEERING
Division of EBL ENGINEERS, LLC
The Professional Engineering Center
8505 Harford Road, Baltimore, Maryland 21234-5701
(410) 668-8000 Fax (410) 668-8001
email: ebl@ebl-engineers.com
Fire Protection – Life Safety – Code Compliance

SYM | DESCRIPTION | DATE | APPR

SEAL

DES | DRW
REVIEWED BY
PM/DM
CHIEF ENG/ARCH

DEPARTMENT OF THE NAVY
NAVAL FACILITIES ENGINEERING COMMAND
WASHINGTON NAVY YARD, WASHINGTON D.C.
ROICC
NAVAL RESEARCH LABORATORY
DISTRICT OF COLUMBIA
RENOVATION OF BUILDING A69
WASHINGTON, D.C.
FLOOR PLANS - FIRE PROTECTION

CODE ID. NO. 80091	SIZE D
SCALE:	AS NOTED
MAXIMO NO.	JPXMY
STA. PROJ. NO.	855305
WORK ORDER NO.	0010
CONSTR. CONTR. NO.	
NAVFAC DRAWING NO.	13022590
SHEET	90 OF 93

FP2.0

DRAWFORM REVISION: 01 MAY 2006

REVDATE: FILE NAME: G:\projects\2009\09203.000\cadd\submission 100%\09203 FP2.0.dwg LAYOUT NAME: FP2.0 PLOTTED: Tuesday, July 06, 2010 - 9:15am

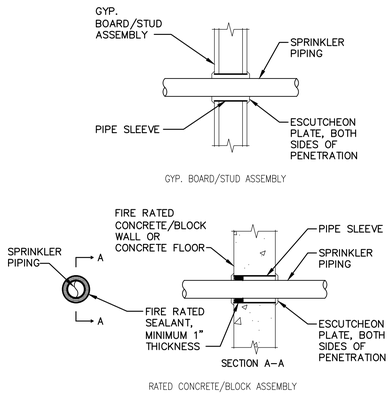

WALL PENETRATION DETAILS

NO SCALE

NOTES:

1. SEE ARCHITECTURAL DRAWINGS FOR FIRE RESISTANCE RATED WALL LOCATION, AS APPLICABLE TO THIS PROJECT.

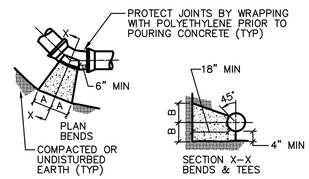

SIZE	1/4 BENDS		1/8 BENDS		1/16 BENDS		TEES		PLUGS	
	A	B	A	B	A	B	A	B	C	D
6"	16"	10"	9"	10"	6"	8"	10"	12"	10"	21"

CONCRETE THRUST BLOCK DETAIL

NO SCALE

NOTES:

1. ALL BEARING SURFACES FOR CONCRETE BLOCKING SHALL BE UNDISTURBED EARTH WITH A MIN BEARING VALUE OF 2000 PSF. THE MIN THICKNESS OF UNDISTURBED EARTH BEHIND THE BLOCKING SHALL BE 5 FEET.
2. BLOCKING SHOWN IS FOR MAX STATIC PRESSURE OF 120 PSF PLUS WATER HAMMER ALLOWANCE. FORM SIDES OF THRUST BLOCKS.
3. THRUST BLOCKS SHALL UTILIZE 3000 PSI CONCRETE.

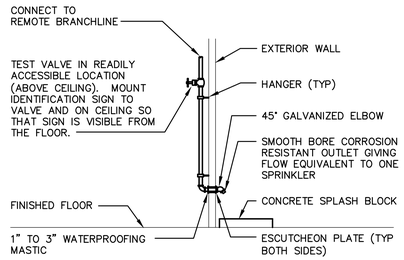

WET PIPE SYSTEM TEST CONNECTION DETAIL

NO SCALE

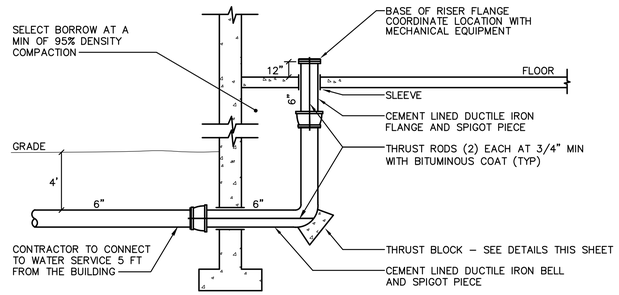

WATER SERVICE CONNECTION DETAIL

NO SCALE

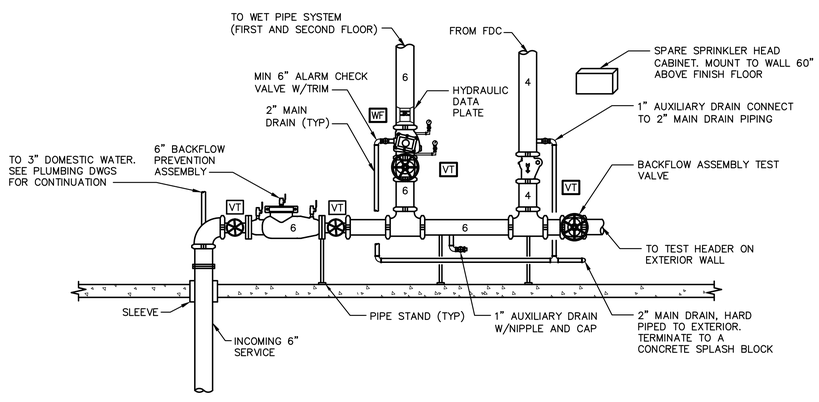

WET PIPE SPRINKLER SYSTEM RISER DETAIL

NO SCALE

NOTES:

1. SECURE PIPE STANDS TO PIPE AND FLOOR.
2. PROVIDE ALL SIGNAGE AND HYDRAULIC DATA PLACARDS.

07/09/10

CAUTION: IF SHEET IS LESS THAN 36" X 24" USE GRAPHIC SCALE

SYM	DESCRIPTION	DATE	APPR

NAVFAC

MARSHALL CRAFT ASSOCIATES

Marshall Craft Associates, Inc.
Architecture • Engineering • Planning
6172 Tow Road, Baltimore, Maryland 21215-2011
410.542.2121 Fax 410.332.9206

EBL FIRE ENGINEERING
Division of EBL ENGINEERING, LLC
The Professional Engineering Group
8005 Harford Road, Baltimore, Maryland 21234-5701
(410) 882-1100 Fax (410) 882-1600
e-mail: ebl@ebl-fire.com
Fire Protection ~ Life Safety ~ Code Compliance

PROFESSIONAL CERTIFICATION:
I HEREBY CERTIFY THAT THESE DOCUMENTS WERE PREPARED OR APPROVED BY ME, AND THAT I AM A DULY LICENSED PROFESSIONAL ENGINEER UNDER THE LAWS OF THE STATE OF MARYLAND, LICENSE NO. 15029
EXPIRATION DATE: 11/24/11

SEAL

DES	DRW
REVIEWED BY	
PM/DM	
CHIEF ENG/ARCH	

DEPARTMENT OF THE NAVY
NAVAL FACILITIES ENGINEERING COMMAND
WASHINGTON NAVY YARD, WASHINGTON D.C.
ROICC
NAVAL RESEARCH LABORATORY
DISTRICT OF COLUMBIA
RENOVATION OF BUILDING A69
WASHINGTON, D.C.
FIRE PROTECTION SECTIONS & DETAILS

CODE ID. NO. 80091	SIZE D
SCALE:	AS NOTED
MAXIMO NO:	JPXMY
STA. PROJ. NO.	855305
WORK ORDER NO.	0010
CONSTR. CONTR. NO.	
NAVFAC DRAWING NO.	13022591
SHEET 91 OF 93	

FP6.0

DRAWFORM REVISION: 01 MAY 2006

REVDATE: FILE NAME: G:\projects\2009\09203.000\cadd\submission 100%\09203 FP6.0.dwg LAYOUT NAME: FP6.0 PLOTTED: Tuesday, July 06, 2010 - 9:14am

FIRE ALARM MATRIX ①

SYSTEM RESPONSE	DEVICE ACTIVATION: ACTIVATION OF ANY FIRE ALARM MANUAL PULL STATION	ACTIVATION OF ANY AREA SMOKE SENSOR	ACTIVATION OF ANY ASSOCIATED DUCT SMOKE DETECTOR	ACTIVATION OF ANY WATERFLOW/PRESSURE SWITCH	ACTIVATION OF ANY VALVE TAMPER SUPERVISORY SWITCH	POWER SUPPLY PROBLEMS (PRIMARY, TROUBLE AND SECONDARY)	OPEN WIRE OR GROUND IN ANY SUPERVISED CIRCUIT
ACTIVATE BUILDING COMBINATION SPEAKER/STROBE, SPEAKERS, AND STROBES	●	●		●			
SHUTDOWN ASSOCIATED MECHANICAL UNIT			●				
ACTIVATE SYSTEM SUPERVISORY			●		●		
ACTIVATE SYSTEM TROUBLE						●	●
ANNUNCIATE AT THE FACP	●	●	●	●	●	●	●
RECORD EVENTS IN THE SYSTEM MEMORY	●	●	●	●	●	●	●
ACTIVATE THE BASE REPORTING STATION (ALARM, SUPERVISORY AND TROUBLE)	●	●	●	●	●	●	●

FIRE ALARM MATRIX NOTES:

① FOR ADDITIONAL SYSTEM OPERATION REQUIREMENTS, SEE SPEC SECTION 13851.

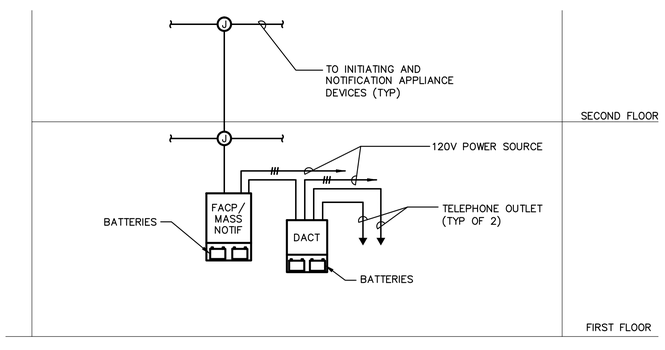

FIRE ALARM RISER DIAGRAM

NO SCALE

FIRE ALARM RISER DIAGRAM GENERAL NOTES:

1. ALL WIRING AND CONDUIT SIZES AND QUANTITIES SHALL BE IN ACCORDANCE WITH THE FIRE ALARM SYSTEM MANUFACTURER'S RECOMMENDATIONS, NFPA 70 AND NFPA 72. COORDINATE ALL WORK WITH THE MECHANICAL AND SPRINKLER INSTALLERS.
2. FIRE ALARM RISER DIAGRAM IS DIAGRAMMATIC. RUNS OF CONDUIT AND MANNER OF CONNECTION SHALL BE DETERMINED BY THE FIRE ALARM/ELECTRICAL INSTALLER AND IN ACCORDANCE WITH THE FIRE ALARM SYSTEM MANUFACTURER'S RECOMMENDATIONS, NFPA 70, NFPA 72 AND THE CONTRACT SPECIFICATIONS.
3. ALL FIRE ALARM WIRING SHALL BE INSTALLED IN 3/4" CONDUIT (MINIMUM).
4. SEE FLOOR PLAN DRAWINGS FOR THE FIRE ALARM SYSTEM INITIATING AND NOTIFICATION APPLIANCE DEVICE LOCATIONS.

FIRE ALARM/ELECTRICAL GENERAL NOTES:

1. THE GENERAL SCOPE OF THE FIRE ALARM PORTION OF THIS PROJECT SHALL CONSIST OF THE INSTALLATION OF A NEW ANALOG/ADDRESSABLE FIRE ALARM AND DETECTION EVACUATION SYSTEM AND MASS NOTIFICATION SYSTEM FOR BUILDING A69.
2. PROVIDE COMPLETE AND OPERATIONAL SYSTEMS. THE FIRE ALARM AND MASS NOTIFICATION SYSTEMS SHALL BE DESIGNED, INSTALLED, TESTED PLACED INTO SERVICE IN ACCORDANCE WITH THE REQUIREMENTS AND APPENDICES OF NFPA 70, 72, 90A, 241, IBC, IMC, UNIFIED FACILITIES CRITERIA, THE CONTRACT DRAWINGS AND SPECIFICATIONS.
3. THE FIRE ALARM/ELECTRICAL INSTALLER SHALL SUBMIT COMPLETE PLANS TO THE NAVFAC FIRE PROTECTION ENGINEER AND ENGINEER OF RECORD FOR REVIEW AND APPROVAL IN ACCORDANCE WITH THE SPECIFICATIONS. NO INSTALLATION OF WORK SHALL BE STARTED UNTIL APPROVAL IS OBTAINED. FINAL DESIGN OF THE FIRE PROTECTION SYSTEMS SHALL BE COORDINATED WITH OTHER TRADES AND EXISTING FIELD CONDITIONS.
4. THE FIRE ALARM/ELECTRICAL INSTALLER SHALL COORDINATE THE INSTALLATION OF THE FIRE ALARM AND MASS NOTIFICATION SYSTEMS WITH THE NRL COTR.
5. CONNECT ALL FIRE ALARM DEVICES WITH APPROVED TERMINAL STRIPS. WIRE NUTS ARE NOT PERMITTED.
6. ALL DEVICES SHALL BE MOUNTED AND SECURED TO THE BUILDING STRUCTURE.
7. ALL FIRE ALARM WORK MUST BE COORDINATED WITH THE NRL COTR.
8. THE SUBMITTAL SHALL INDICATE DEVICE LOCATIONS, POINT OF CONNECTIONS TO THE SYSTEM, AND FIRE ALARM CIRCUITS TO WHICH NEW DEVICES ARE CONNECTED. INCLUDE IN THE SUBMITTAL NOTIFICATION APPLIANCE CIRCUIT CALCULATIONS FOR ALL NEW CIRCUITS. THE LOADING OF CIRCUITS SHALL NOT EXCEED 75%.
9. ALL FLOORS: WHERE CEILING MOUNTED FIRE ALARM DEVICES ARE INDICATED IN AREAS OF ACOUSTICAL TILE CEILINGS, INSTALL THE FIRE ALARM DEVICE IN THE ACOUSTICAL TILE CEILING WITH CONDUIT INSTALLED ABOVE CEILING. DEVICES SHALL BE CENTERED IN CEILING TILES.
10. FIRE ALARM MANUAL PULL STATIONS AT DOOR OPENINGS SHALL BE WITHIN 5 FEET HORIZONTALLY OF THE DOOR OPENING.
11. SPACING OF SMOKE DETECTORS, AND DUCT SMOKE DETECTORS SHALL BE IN ACCORDANCE WITH NFPA 72, 90A, AND AS INDICATED ON THE CONTRACT DOCUMENTS.
12. THE FIRE ALARM/ELECTRICAL INSTALLER SHALL COORDINATE THE EXACT LOCATION OF CEILING MOUNTED FIRE ALARM SYSTEM DEVICES INCLUDING THE ROUTING OF CONDUIT ABOVE CEILINGS WITH LIGHT FIXTURES, CONDUITS, DUCTWORK, DIFFUSERS, PIPING, SPRINKLER HEADS AND ANY OTHER OBSTRUCTIONS.
13. INSTALLATION OF NEW CONDUIT AND EQUIPMENT SHALL BE PERFORMED IN A NEAT AND WORKMANLIKE MANNER, SHALL CONFORM TO THE LATEST TRADE PRACTICES, SHALL BE IN ACCORDANCE WITH NFPA 70, AND THE CONTRACT DOCUMENTS.
14. CONDUCTORS FOR THE FIRE ALARM SYSTEM SHALL BE INSTALLED IN ACCORDANCE WITH NFPA 70. THE CONDUCTORS SHALL NOT BE INSTALLED WITH CONDUCTORS OF LIGHTING OR POWER SYSTEMS. THE SUM OF THE CROSS-AREA OF INDIVIDUAL CONDUCTORS SHALL NOT EXCEED 40 PERCENT OF THE INTERIOR CROSS-SECTION OF THE CONDUIT. ALL FIRE ALARM SYSTEM CONDUIT SHALL NOT BE LESS THAN 3/4 INCH.
15. THE TERM "PROVIDE" MEANS TO FURNISH AND INSTALL, COMPLETE AND READY FOR INTENDED USE.

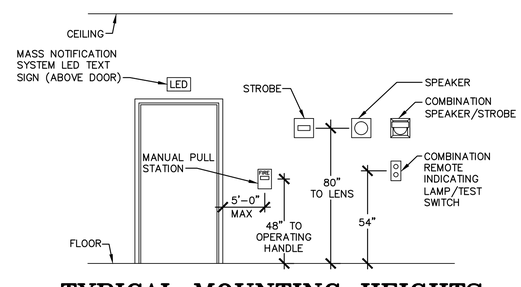

TYPICAL MOUNTING HEIGHTS FOR WALL MOUNTED DEVICES

NO SCALE

FIRE ALARM LEGEND

(NEW WORK)

SYMBOL	DESCRIPTION
	SPECIAL CABINET – TYPE AS NOTED
F	ADDRESSABLE FIRE ALARM MANUAL PULL STATION – MOUNTING HEIGHT 4'–0" UNLESS NOTED OTHERWISE
F 15,30,75,110	FIRE ALARM COMBINATION AUDIO/VISUAL (SPEAKER/STROBE) DEVICE – SUBSCRIPT 'WP' DENOTES WEATHER–PROOF DEVICE – – MOUNTING HEIGHT 80" UNLESS NOTED OTHERWISE – SUBSCRIPT '15, 30, 75, 110' DENOTES CANDELA RATING
V 15,30,75,110	FIRE ALARM VISUAL (STROBE) DEVICE – MOUNTING HEIGHT 80" UNLESS NOTED OTHERWISE – SUBSCRIPT '15,30,75,110' DENOTES CANDELA RATING
WP S , S	FIRE ALARM AUDIO (SPEAKER) DEVICE – SUBSCRIPT 'WP' DENOTES WEATHER–PROOF DEVICE – MOUNTING HEIGHT 80" UNLESS NOTED OTHERWISE
S	SMOKE SENSOR – PHOTOELECTRIC TYPE
SA S D , RA S D	SMOKE SENSOR – PHOTO–ELECTRIC TYPE – SUBSCRIPT 'SA' DENOTES SUPPLY AIR – SUPERSCRIPT 'RA' DENOTES RETURN AIR – SUBSCRIPT 'D' DENOTES DUCT TYPE
CM	JUNCTION BOX WITH CONTROL MODULE
VT	VALVE TAMPER SUPERVISORY SWITCH WITH ADDRESSABLE MONITOR MODULE
WF	WATERFLOW SWITCH WITH ADDRESSABLE MONITOR MODULE
LED	MASS NOTIFICATION SYSTEM LED TEXT SIGN
WP F	ELECTRIC SPRINKLER ALARM BELL SUBSCRIPT 'WP' DENOTES WEATHER–PROOF DEVICE
R	COMBINATION REMOTE INDICATING LAMP/TEST SWITCH

ABBREVIATIONS

A	AMPERE
AC	ABOVE CEILING
ACT	ACOUSTICAL CEILING TILE
AHU	AIR HANDLING UNIT
C	CONDUIT
COTR	CONTRACTING OFFICER TECHNICAL REPRESENTATIVE
DACT	DIGITAL ALARM COMMUNICATOR TRANSMITTER
FA	FIRE ALARM
FACP	FIRE ALARM CONTROL PANEL
FAPB	FIRE ALARM POWER BOOSTER PANEL
FATC	FIRE ALARM TERMINAL CABINET
GRD	GROUND
IBC	INTERNATIONAL BUILDING CODE
LED	LIGHT EMITTING DIODE
NFPA	NATIONAL FIRE PROTECTION ASSOCIATION
NOTIF	NOTIFICATION
OFF	OFFICE
ø , PH	PHASE
RTU	ROOF TOP UNIT
TEL	TELEPHONE
TVSS	TRANSIENT VOLTAGE SURGE SUPPRESSOR
TYP	TYPICAL
UF	UNDER FLOOR
UFC	UNIFIED FACILITIES CRITERIA
V	VOLTS
W	WIRE
W/	WITH
WP	WEATHERPROOF

CODE REFERENCES:

ALL REFERENCES TO NFPA 70 SHALL MEAN THE 2008 EDITION
ALL REFERENCES TO NFPA 72 SHALL MEAN THE 2007 EDITION
ALL REFERENCES TO NFPA 90A SHALL MEAN THE 2009 EDITION
ALL REFERENCES TO NFPA 241 SHALL MEAN THE 2009 EDITION
ALL REFERENCES TO IBC SHALL MEAN THE 2009 EDITION
ALL REFERENCES TO IMC SHALL MEAN THE 2009 EDITION
ALL REFERENCES TO UFC 3-600-01 SHALL MEAN THE 14 JULY 2009 EDITION
ALL REFERENCES TO UFC 3-600-10N SHALL MEAN THE AUGUST 2007 EDITION
ALL REFERENCES TO UFC 4-021-01 SHALL MEAN THE 9 APRIL 2008 EDITION

07/09/10

CAUTION: IF SHEET IS LESS THAN 36" X 24" USE GRAPHIC SCALE

PROFESSIONAL CERTIFICATION
I HEREBY CERTIFY THAT THESE DOCUMENTS WERE PREPARED OR APPROVED BY ME, AND THAT I AM A DULY LICENSED PROFESSIONAL ENGINEER UNDER THE LAWS OF THE STATE OF MARYLAND. LICENSE NO. 22-29-0001
EXPIRATION DATE: 17/9/11

SYM	DESCRIPTION	DATE	APPR

NAVFAC

MARSHALL CRAFT ASSOCIATES, INC.
Marshall-Craft Associates, Inc.
Architecture, Engineering, Planning
6112 York Road, Baltimore, Maryland 21212-2011
410.532.7777 Fax: 410.532.9205

EBL FIRE ENGINEERING
Division of EBL ENGINEERING, LLC
The Professional Engineering Center
8005 Harford Road, Baltimore, Maryland 21234-5701
(410) 882-1100 Fax: (410) 882-9001
e-mail: ebl@ebl-fire.com
Fire Protection ~ Life Safety ~ Code Compliance

SEAL

DES	DRW
REVIEWED BY	
PM/DM	
CHIEF ENG/ARCH	

DEPARTMENT OF THE NAVY
NAVAL FACILITIES ENGINEERING COMMAND
WASHINGTON NAVY YARD, WASHINGTON D.C.
ROICC
NAVAL RESEARCH LABORATORY
DISTRICT OF COLUMBIA
RENOVATION OF BUILDING A69
WASHINGTON, D.C.

FIRE ALARM LEGEND, NOTES & DETAILS

CODE ID. NO. 80091	SIZE D
SCALE:	AS NOTED
MAXIMO NO.	JPXMY
STA. PROJ. NO.	855305
WORK ORDER NO.	0010
CONSTR. CONTR. NO.	
NAVFAC DRAWING NO.	13022592
SHEET 92 OF 93	
FA1.0	

DRAWFORM REVISION: 01 MAY 2006

REVDATE: FILE NAME: G:\projects\2009\09203.000\cadd\submission 100%\09203 FA1.0.dwg LAYOUT NAME: FA1.0 PLOTTED: Tuesday, July 06, 2010 - 9:13am

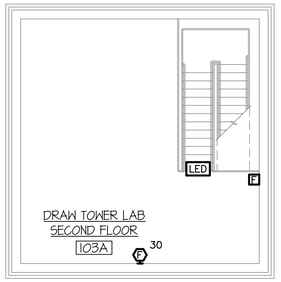

SECOND FLOOR PLAN – FIRE ALARM

SCALE: 1/8" = 1'-0"

GENERAL NOTES:

1. FOR FIRE ALARM LEGEND, GENERAL NOTES, MATRIX AND DETAILS REFER TO SHEET FA1.0.

DRAWING NOTES: (APPLIES TO THIS SHEET ONLY)

1. FIRE ALARM/MASS NOTIFICATION CONTROL PANEL.
2. FIRE ALARM TRANSMITTER PANEL (DMP XR-500).
3. BACKFLOW PREVENTION CONTROL VALVE TAMPER SUPERVISORY SWITCH.
4. SPRINKLER SYSTEM CONTROL VALVE TAMPER SUPERVISORY SWITCH.
5. BACKFLOW TEST VALVE TAMPER SUPERVISORY SWITCH.
6. WATERFLOW SWITCH.
7. EXTEND 2#14 ¾" CONDUIT FROM CONTROL MODULE AND CONNECT TO ASSOCIATED AHU FOR FAN SHUT DOWN. MOUNT CONTROL MODULES WITHIN 3' OF STARTER.
8. INSTALL ELECTRIC SPRINKLER ALARM BELL DIRECTLY ABOVE AND IN LINE WITH THE FDC. COORDINATE EXACT LOCATION WITH FIRE SPRINKLER INSTALLER PRIOR TO ROUGH-IN AND SHEET FP2.0.

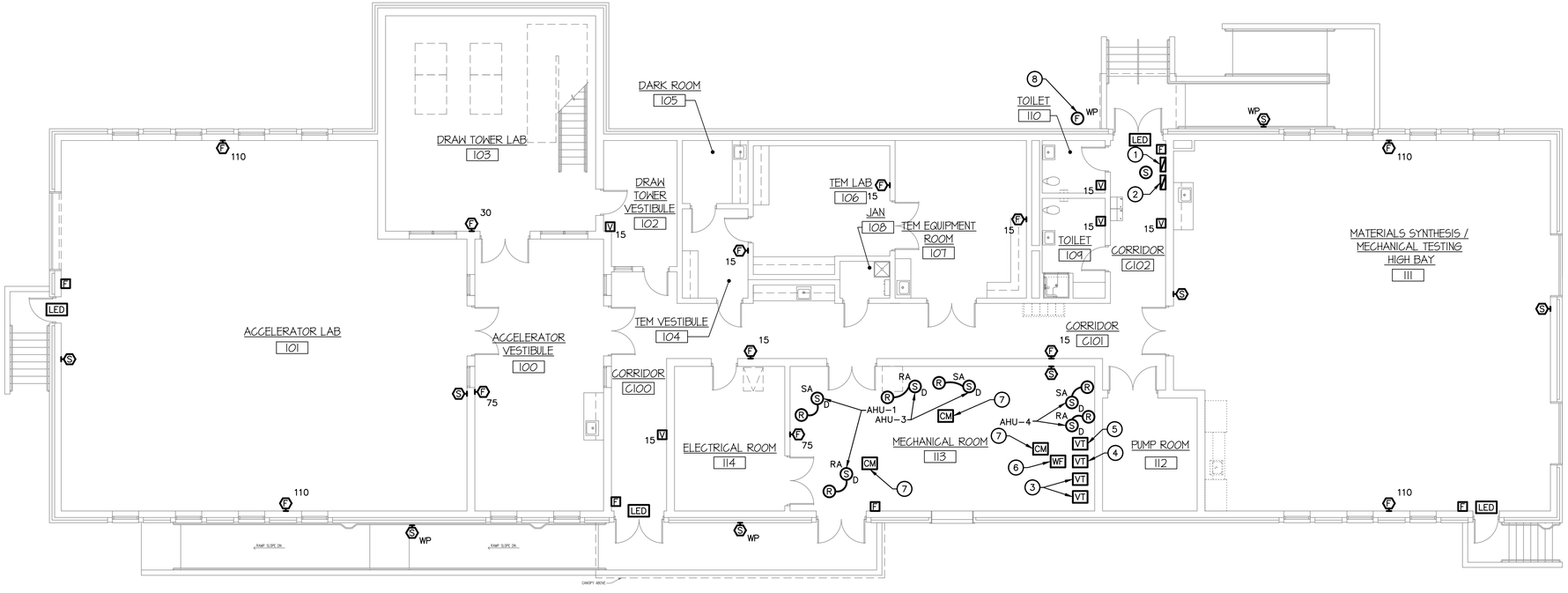

FIRST FLOOR PLAN – FIRE ALARM

SCALE: 1/8" = 1'-0"

0 1' 4' 8' 16' 24'

SCALE: 1/8" = 1'-0"

07/09/10

CAUTION: IF SHEET IS LESS THAN 36" X 24" USE GRAPHIC SCALE

PROFESSIONAL CERTIFICATION:
I HEREBY CERTIFY THAT THESE DOCUMENTS WERE PREPARED OR APPROVED BY ME, AND THAT I AM A DULY LICENSED PROFESSIONAL ENGINEER UNDER THE LAWS OF THE STATE OF MARYLAND, LICENSE NO. 27168
EXPIRATION DATE: 11/04/11

SYM	DESCRIPTION	DATE	APPR

NAVFAC

MARSHALL CRAFT ASSOCIATES
Marshall Craft Associates, Inc.
Architecture & Interior Design / Planning
6112 York Road, Baltimore, Maryland 21212-2011
410.532.2121 Fax: 410.532.3206

EBL FIRE ENGINEERING
Division of EBL ENGINEERS, LLC
The Professional Engineering Center
8600 Harford Road, Baltimore, Maryland 21234-5701
(410) 668-0000 Fax (410) 668-0001
e-mail: ebl@ebl-engineers.com
Fire Protection – Life Safety – Code Compliance

SEAL

DES | DRW
REVIEWED BY
PM/DM
CHIEF ENG/ARCH

DEPARTMENT OF THE NAVY
NAVAL FACILITIES ENGINEERING COMMAND
WASHINGTON NAVY YARD, WASHINGTON D.C.
ROICC
NAVAL RESEARCH LABORATORY
DISTRICT OF COLUMBIA
RENOVATION OF BUILDING A69
WASHINGTON, D.C.
FLOOR PLANS - FIRE ALARM

CODE ID. NO. 80091	SIZE D
SCALE:	AS NOTED
MAXIMO NO.	JPXMY
STA. PROJ. NO.	855305
WORK ORDER NO.	0010
CONSTR. CONTR. NO.	
NAVFAC DRAWING NO.	13022593
SHEET 93 OF 93	

FA2.0

DRAWFORM REVISION: 01 MAY 2006

REVDATE: FILE NAME: G:\projects\2009\09203.000\cadd\submission 100%\09203 FA2.0.dwg LAYOUT NAME: FA2.0 PLOTTED: Tuesday, July 06, 2010 - 9:16am