NAVAL RESEARCH LABORATORY

Subsystems and Modules for RF Distribution System

STATEMENT OF WORK

Solicitation N00173-13-R-PW10

TABLE OF CONTENTS

TABLE OF CONTENTS 2
LIST OF FIGURES 4
LIST OF TABLES 5
1 Scope 6
1.1 Background 6
1.2 Abbreviations and Acronyms 7
2 Applicable Documents 9
2.1 Department of Defense (DoD) Specifications 9
2.2 DoD Standards NONE 9
2.3 Other Government Documents NONE 9
2.4 Non-Government Documents 9
2.5 Order of Precedence 9
3 Requirements 10
3.1 General Requirements 10
3.2 Special Requirements 10
3.2.1 Security Requirements 10
3.2.2 Program Management 10
3.3 Detailed Tasks 11
3.3.1 Phase I: Design and Engineering 11
3.3.2 Phase II: Fabrication and Test 13
3.3.3 Support Services 21
4 Quality Assurance Provisions 22
4.1 Qualification Test Methods 22
5 Preparation for Delivery 23
5.1 Preparation for Shipment 23
5.2 Packaging and Packing of Spare Parts 23
5.3 Prohibited Packing Materials 23
5.4 Marking of Shipments 23
5.5 Unpacking Instructions 23
6 Appendix A: System Technical Manual 24
6.1 General Requirements 24
6.2 Overall System Functional Description 24
6.3 Operation 24
6.4 Maintenance 24
6.5 Logistic Support 25
6.6 Schematics, Drawings, and Tables 25
7 Appendix B: A-Level Performance Specifications 26
7.1.1 Common 26

7.1.2 Unit Type 1: 9x8 RF Switch Matrix 28
7.1.3 Unit Type 2: Ganged 2x1 Switches 32
7.1.4 Unit Type 3: 94x110 Broadband RF Switch Matrix 34
8 Appendix C 40
8.1 Qualification Cross-Reference Table 40

LIST OF FIGURES

Figure 1-1: SoS-Level System Diagram 6
Figure 1-2: SCDS Subsystems 7
Figure 7-1: 9x8 RFSM Top-Level Diagram 29
Figure 7-2: 9x8 RFSM Hardware-Driven Control Port Timing Information 31
Figure 7-3: Ganged 2x1 Switches Top-Level Diagram 33
Figure 7-4: Top-Level Diagram for 94x110 Broadband RFSM 35
Figure 7-5: Summary of RF Input, RF Output and Connectivity Requirements for 94x110 Broadband RFSM (see Req'ts 0C-1-004 and 0C-1-005, 0C-1-009, 0c-1-010) 38
Figure 7-6: Notional Capability Build-Out Plan (see Req't 0C-1-006) 39

LIST OF TABLES

Table 3-1: Phase IA CDRLs 12
Table 3-2: Phase IB CDRLs 13
Table 3-3: Phase II CDRLs 21
Table 7-1: Common SE States and Modes Specifications 26
Table 7-2: Common physical and environmental SE Specifications 27
Table 7-3: Common SE External Interface Specifications 27
Table 7-4: Common SE Hardware Performance Specifications 28
Table 7-5: Specific External Interface Requirements for 9x8 RFSM 30
Table 7-6: 9x8 RFSM Port and Frequency Plan (see Req'ts 0A-1-001 and 0A-1-002) 30
Table 7-7: 9x8 RFSM Hardware-Driven Control Ports: 66-pin Pin-out 31
Table 7-8: 9x8 RFSM Hardware-Driven Control Port Commands 31
Table 7-9: Specific Hardware/Performance Requirements for 9x8 RFSM 32
Table 7-10: Specific External Interface Requirements for Ganged 2x1 Switches 33
Table 7-11: Specific Hardware/Performance Requirements for Ganged 2x1 Switches 34
Table 7-12: Specific Software Requirements for Ganged 2x1 Switches 34
Table 7-13: Specific External Interface Requirements for 94x110 Broadband RFSM 35
Table 7-14: Specific Hardware/Performance Requirements for 94x110 Broadband RFSM 36
Table 7-15: 94x110 Broadband RFSM Variable Attenuator Details (Req'ts 0C-1-014 through 0C-1-016) 37
Table 7-16: Specific Software Requirements for 94x110 Broadband RFSM 37
Table 8-1: Qualification Cross-Reference Table 44

1 Scope

This statement of work (SOW) defines the effort required for the design, engineering development, fabrication, and test of multiple units for three unique subsystems of an NRL signal conditioning and distribution system. Additionally, Section 7 defines performance specifications for these subsystems.

1.1 Background

The Naval Research Laboratory (NRL) is developing a radio frequency (RF) signal conditioning and distribution system (SCDS). The SCDS provides configurable connectivity between sensor assets and signal processor assets. To put the SCDS in perspective with the overarching system of systems (SoS), Figure 1-1 shows the SoS-level functional block diagram with the SCDS highlighted. The SCDS accepts outputs of the sensor systems, which can be broadly categorized into five suites of systems: Sensor Systems A, B, C, D, and E. The SCDS provides inputs to mission system equipment, which can be broadly categorized into five suites of equipment: Mission System A, Mission System B, Mission System C, Mission System D, and Mission System E. The development relevant to this RFP pertains to three SCDS subsystems shown in Figure 1-2 as Unit Type 1, Unit Type 2, and Unit Type 3.

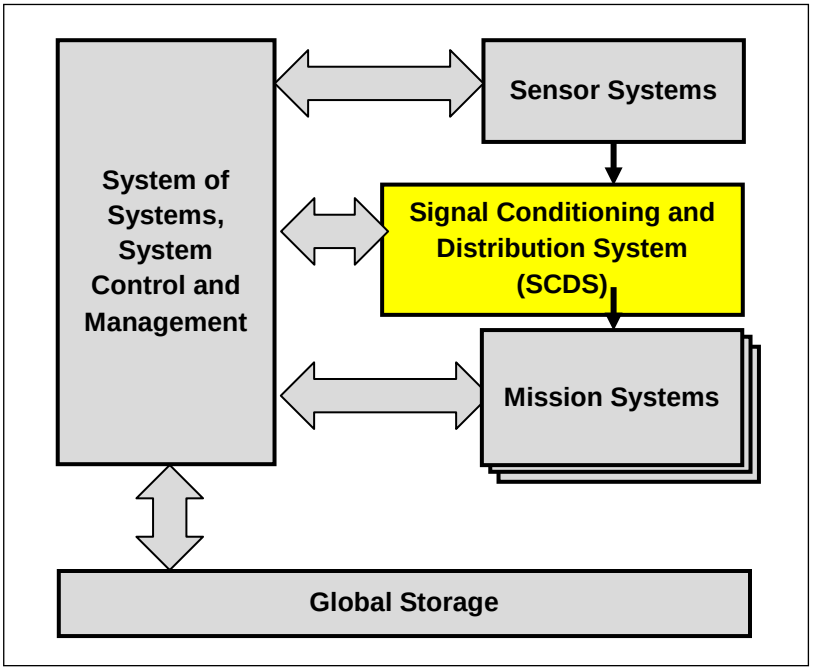

Figure 1-1: SoS-Level System Diagram

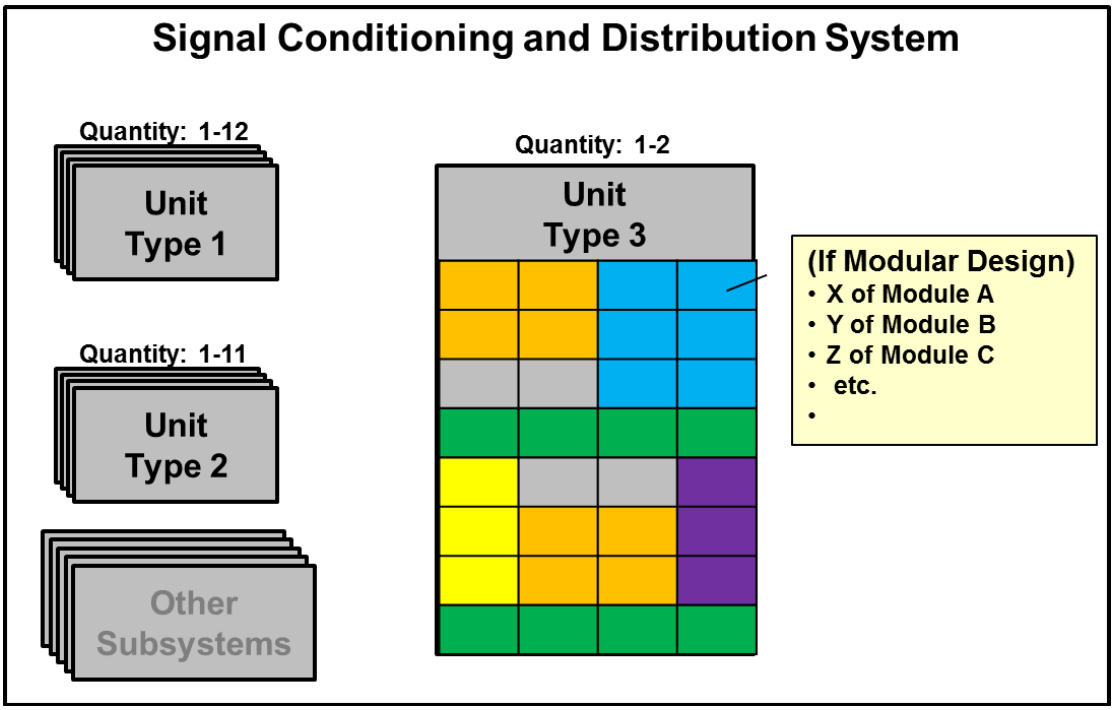

Figure 1-2: SCDS Subsystems

1.2 Abbreviations and Acronyms

API	Application Programming Interface
BIT	Built-in Test
BITE	Built-in-Test Equipment
BOM	Bill of Materials
CONOPS	Concept of Operations
CONUS	Contiguous United States
CDR	Critical Design Review
EC	Engineering Change
FC	Field Change
GFE	Government Furnished Equipment
GFI	Government Furnished Information
HMI	Human Machine Interface
ICD	Interface Control Document
KOM	Kickoff Meeting
NRL	Naval Research Laboratory
OCONUS	Outside the Contiguous United States
ODC	Other Direct Charge
PDR	Preliminary Design Review
RF	Radio Frequency
RFSM	RF Switch Matrix

SE	System Element
SCD	Specification Control Drawing
SCDS	Signal Conditioning and Distribution System
SoS	System of Systems
SOW	Statement of Work
STM	System Technical Manual

2 Applicable Documents

2.1 Department of Defense (DoD) Specifications

MIL-P-116	Methods of Preservation
MIL-STD-129M	Marking for Shipment and Storage

2.2 DoD Standards NONE

2.3 Other Government Documents NONE

2.4 Non-Government Documents

IEEE 802.3-2012	IEEE Ethernet Standards
ASTM D3951	Standard Practice for Commercial Packaging
IEC 61000-3-2	Electromagnetic Compatibility (EMC)

2.5 Order of Precedence

When the requirements of this specification or applicable subsidiary documents are in conflict, the following precedence shall apply:

a) Contract that references this specification
b) This specification
c) Applicable subsidiary documents

The contractor shall promptly notify the contracting activity of each instance of conflicting, or apparently conflicting, requirements.

Nothing in this document shall be construed to exempt or waive any requirements or restrictions contained in applicable laws and regulations. When permitted by an applicable law or regulation, requests for exemptions and waivers may be submitted to the contracting officer for processing.

3 Requirements

3.1 General Requirements

The work required by this contract shall be performed in accordance with this SOW including A-level performance specifications (Appendix B, Part 7 of this SOW).

As required by the issuance of delivery/task orders, the contractor shall design, develop, fabricate, test, and deliver units, modules, and spares meeting all of the applicable design and performance requirements specified in this SOW.

The three signal conditioning and distribution system (SCDS) subsystems to be developed and delivered under this Contract are as follows:

- Unit Type 1: 9x8 RF Switch Matrix (RFSM)
- Unit Type 2: Ganged 2x1 Switches
- Unit Type 3: 94x110 Broadband Switch Matrix

3.2 Special Requirements

3.2.1 Security Requirements

The work required by this contract requires accessing information classified at the SECRET level. Participating contractor personnel shall have a current, valid, and final SECRET clearance granted by the Department of Defense.

3.2.2 Program Management

The contractor shall establish and maintain operations that shall include the following areas:

- Program planning and control including security procedures
- Subcontractor control if applicable
- Financial management
- Data management
- Management and accountability for Government-furnished equipment (GFE), material, or information, if applicable
- Risk management

3.3 Detailed Tasks

3.3.1 Phase I: Design and Engineering

The task order for Phase IA and IB (task order 0001) will be awarded with award of the base contract.

3.3.1.1 Phase IA: Preliminary Design and Engineering

In Phase IA, the contractor shall refine their technical approach that was proposed as a response to the RFP associated with this SOW.

Within two weeks after contract award, the contracting officer's representative (COR) will schedule and the contractor shall support a kickoff meeting (KOM) for the purpose of reviewing the program requirements and A-level specifications.

Within two months after contract award, the contractor shall conduct a preliminary design review (PDR) for the three Unit Type designs to formally summarize the work performed by the contractor during this phase. The contractor shall explore engineering tradeoffs that support its decisions with regard to the design's performance, cost, ease of manufacturing, reliability, supportability, and scalability.

The contractor shall demonstrate the following:

- Draft B-level (detailed) system and subsystem specifications are traceable to A-level specifications
- Risk analysis has been performed on the designs
- Draft mechanical, electrical, and software interface control documents (ICDs) are complete

3.3.1.1.1 Phase IA Deliverables

The format and delivery schedule for deliverables are outlined in the DD 1423s, Contract Data Requirements Lists (CDRLs).

The contractor shall provide the following deliverables:

- CDRLs as listed in Table 3-1.

Identifier	Name	Description
A001	Quarterly Reports	The contractor shall provide technical summary reports.
A002	Draft B-Level Specifications	Draft specifications for all three subsystems (unit types)
A003	Draft ICDs	Draft ICDs for all three subsystems (unit types), including software, hardware, mechanical interface, and electrical interface
A004	PDR	PDR material

Table 3-1: Phase IA CDRLs

3.3.1.1.2 Government responsibilities

By the PDR, the Government will furnish the contractor with information concerning the cooling configuration of the 19” racks that will ultimately house the delivered hardware.

Within 2 weeks of contract award, the government will furnish the contractor with information concerning the thresholded power level for health and status monitoring of the 9x8 and 94x110 RFSMs.

3.3.1.2 Phase IB: Detailed Design and Engineering

As a result of the analyses and design work performed in Phase IA, the contractor shall perform detailed design and engineering tasks to finalize and formalize the design before unit fabrication.

Within two months following government approval to commence Phase IB, the contractor shall conduct a critical design review (CDR) for the three Unit Type designs to formally summarize the work performed by the contractor during this phase. The contractor shall demonstrate the following:

- Final B-level (detailed) system and subsystem specifications are traceable to A-level specifications
- RF cascade analyses demonstrate RF performance requirements are met
- Updated risk analyses have been performed on the designs
- Final mechanical, electrical, and software interface control documents (ICDs) are complete
- Final factory acceptance test (FAT) plans, but not detailed test procedures, list validation methods and are traceable to fulfilling A-level specifications, including test methodologies

As documented in the A-level specifications (Section 7.1.4, Requirement 0C-1-006), a modular/scalable architecture for Unit Type 3 (94x110 Broadband Switch Matrix) is preferred. If the contractor proposes a modular design, the contractor shall furnish a table (CDRL A007) that includes a name, short description, and unit price for each constituent module. Additionally, the

table shall include the quantity, type, and cost of modules necessary to implement the notional build-out plan shown in Figure 7-6 of Appendix B: A-Level Performance Specifications. This enables the government to establish an initial RF distribution capability and subsequently procure additional modules to provide an enhanced distribution capability up to and including the full capability of the Unit Type 3 design.

3.3.1.2.1 Phase IB Deliverables

The format and delivery schedule for deliverables are outlined in CDRLs.

The contractor shall provide the following deliverables:

- CDRLs as listed in Table 3-2.

Identifier	Name	Description
A001	Quarterly Reports	The contractor shall provide technical and financial summary reports.
A002	Final B-Level Specifications	Finalized specifications for all three subsystems (unit types)
A003	Final ICDs	Final ICDs for all three subsystems (unit types), including Software, Hardware, Mechanical Interface, and Electrical Interface.
A005	CDR	CDR material
A006	RF Performance Report	Calculated cascaded RF performance (Gain, Noise Figure, Dynamic Range, Isolation) for all valid signal paths
A007	Unit Type 3 Module Breakdown	Table defining constituent line-replaceable modules for Unit Type 3 (if any).

Table 3-2: Phase IB CDRLs

3.3.1.3 Anticipated Travel

The contractor shall be expected to travel once during Phase I to Washington, DC, for a formal meeting or informal technical exchange meeting. Other meetings shall be hosted at the contractor's facility.

3.3.2 Phase II: Fabrication and Test

3.3.2.1 Unit Type 1: 9x8 RFSM

Upon issuance of a delivery/task order for Phase II the contractor shall fabricate and test a single Unit Type 1 subsystem (9x8 RFSM) in accordance with the requirements of this SOW. Purchase orders for up to an additional eleven Unit Type 1 subsystems may be issued.

3.3.2.1.1 Simulator/Emulator

Within four weeks after the issuance of the order for Phase II, the contractor shall deliver a software-based simulator for the Unit Type 1 system. The simulator shall be capable of simulating the software-based control interface and conform to the final ICD; it need not provide any RF switching capability. The government shall be able to communicate with the simulator, issue software commands to the simulator and receive (software-generated) status messages from the simulator.

3.3.2.1.2 Test, Evaluation, and Delivery

The contractor shall demonstrate full compliance of all equipment and software with the A-level Performance Specifications through factory acceptance testing (FAT).

Within 16 weeks after issuance of the delivery/task order for Phase II, the contractor shall submit to the government a draft factory acceptance test (FAT) plan for the Unit Type 1 subsystem (CDRL A008) for review, comment, and recommend revisions. The FAT plan shall be a high-level test plan that specifies testing to assess compliance with the requirements of the A-level performance specification and provides the format(s) for test results. The government shall submit its recommended revisions to the contractor within 30 days after receipt. The contractor shall prepare and submit for approval a finalized FAT plan within 15 days after receiving the government response. Upon receipt of the contractor's finalized FAT plan, the government shall make any appropriate changes and distribute the final approved FAT plan.

Within 24 weeks after the delivery/task order for Phase II is issued, the contractor shall complete testing of the Unit Type 1 subsystem in accordance with the approved FAT plan and deliver the test report signed by the contractor's project manager to the government (CLIN A009). Testing shall, at option of the Government, be witnessed by an NRL representative. If any specification shortfalls are identified during testing, all such shortfalls shall be addressed and the item retested. All unresolved specification shortfalls shall be identified in the test report along with the proposed corrective action.

Delivery of the first Unit Type 1 subsystem that has been tested shall be made within 28 weeks of the issuance of the delivery/task order for Phase II. The contractor shall deliver with the first Unit Type 1 subsystem the Report covering any required FAT retesting.

The contractor shall furnish a spares and replacement parts list (CDRL A010) for the Unit Type 1 subsystem, which shall list the best estimate of all parts needed for maintaining the system for a period of 3 years or 20,000 hours of operation, whichever is less. This list shall include sufficient information for procurement of spares and replacement parts, including sources and the quantity of recommended parts/modules for the Unit Type 1 subsystem.

3.3.2.1.3 Drawing Packages

The contractor shall provide drawings and supporting documentation (CDRL A011) to support the installation and service of all procured equipment. The drawing package shall include the following:

a) Recommended installation criteria
b) Recommended installation test and verification procedures and requirements
c) Installation instructions
d) Weight and physical dimensions of each system
e) Power requirements for each power interface to external power
f) Cabling diagrams and connector pin-outs of all external interfaces and significant internal interfaces
g) Any additional information necessary for accurate interface control

The Government also reserves the right to use the drawing package and data contained therein to competitively acquire spares and replacement parts at no additional cost to the Government.

3.3.2.1.4 Technical Manuals

The contractor shall provide technical manuals in accordance with the requirements of Section 6, Appendix A: System Technical Manual. The contractor shall submit technical manuals for approval by the Government as per CDRL A012. Materials submitted for approval shall include all technical documentation for the installation, service, troubleshooting and operation of the RF Distribution Subsystems and Modules addressed by this SOW. The Government shall review the material in accordance with the requirements of Section 6 and CDRL A012. If the government determines that additional data is required to meet the requirements, the contractor shall submit supplemental documentation for approval as per CDRL A012. The Government reserves the right to use and reproduce the technical manuals and data contained therein for Government purposes (including competitive acquisitions of spares and replacement parts) at no additional cost.

For all engineering changes (EC) or field changes (FC), the Government will provide Government-furnished information (GFI), i.e., the current Government-approved version of the technical manual(s). The contractor shall develop change pages based on the Government-approved version of the technical manual(s) and the Government will review them for approval in accordance with the requirements of Section 6. The Government reserves the right to use and reproduce the change pages and data contained therein for Government purposes (including competitive acquisitions) at no additional cost.

3.3.2.2 Unit Type 2: Ganged 2x1 Switches

Upon issuance of a delivery/task order for Phase II, the contractor shall fabricate and test a single Unit Type 2 subsystem (Ganged 2x1 Switches) in accordance with the requirements of this SOW. Delivery/task orders for up to an additional ten Unit Type 2 subsystems may be issued.

3.3.2.2.1 Simulator/Emulator

Within four weeks after the issuance of the delivery/task order for Phase II, the contractor shall deliver a software-based simulator for the Unit Type 2. The simulator shall be capable of simulating the software-based control interface and conform to the final ICD; it need not provide any RF switching capability. The government shall be able to communicate with the simulator, issue software commands to the simulator and receive (software-generated) status messages from the simulator.

3.3.2.2.2 Test, Evaluation, and Delivery

The contractor shall demonstrate full compliance of all equipment and software with the A-level Performance Specifications through factory acceptance testing (FAT).

Within 16 weeks after issuance of the delivery/task order for Phase II, the contractor shall submit to the government a draft Factory Acceptance Test (FAT) plan for the Unit Type 2 subsystem (CDRL A013) for review, comment, and recommend revisions. The FAT plan shall be a high-level test plan that specifies testing to assess compliance with the requirements of the A-level Performance Specification and provides the format(s) for test results. The government shall submit its recommended revisions to the contractor within 30 days after receipt. The contractor shall prepare and submit for approval a finalized FAT plan within 15 days after receiving the government response. Upon receipt of the contractor's finalized FAT plan, the government shall make any appropriate changes and distribute the final approved FAT plan.

Within 24 weeks after the delivery/task order for Phase II is issued, the contractor shall complete testing of the Unit Type 2 subsystem in accordance with the approved FAT plan and deliver the test report signed by the contractor's project manager to the government (CLIN A014). Testing shall, at option of the Government, be witnessed by an NRL representative. If any specification shortfalls are identified during testing, all such shortfalls shall be addressed and the item retested. All unresolved specification shortfalls shall be identified in the test report along with the proposed corrective action.

Delivery of the first Unit Type 2 subsystem that has been tested shall be made within 28 weeks of the issuance of the delivery/task order for Phase II. The contractor shall deliver with the first Unit Type 2 subsystem the Report covering any required FAT retesting.

The contractor shall furnish a spares and replacement parts list (CDRL A015) for the Unit Type 2 subsystem, which shall list the best estimate of all parts needed for maintaining the system for a period of 3 years or 20,000 hours of operation, whichever is less. This list shall include sufficient information for procurement of spares and replacement parts, including sources and the quantity of recommended parts/modules for the Unit Type 2 subsystem.

3.3.2.2.3 Drawing Packages

The contractor shall provide a drawings and supporting documentation (CDRL A016) to support the installation and service of all procured equipment. The drawing package shall include the following:

a) Recommended installation criteria
b) Recommended installation test and verification procedures and requirements
c) Installation instructions
d) Weight and physical dimensions of each system
e) Power requirements for each power interface to external power
f) Cabling diagrams and connector pin-outs of all external interfaces and significant internal interfaces
g) Any additional information necessary for accurate interface control

The Government also reserves the right to use the drawing package and data contained therein to competitively acquire replacement parts and spares at no additional cost to the Government.

3.3.2.2.4 Technical Manuals

The contractor shall provide technical manuals in accordance with the requirements of Section 6, Appendix A: System Technical Manual. The contractor shall submit technical manuals for approval by the Government as per CDRL A017. Materials submitted for approval shall include all technical documentation for the installation, service, troubleshooting and operation of the RF Distribution Subsystems and Modules addressed by this SOW. The Government shall review the material in accordance with the requirements of Section 6 and CDRL A017. If the government determines that additional data is required to meet the requirements, the contractor shall submit supplemental documentation for approval as per CDRL A017. The Government reserves the right to use and reproduce the technical manuals and data contained therein for Government purposes (including competitive acquisitions) at no additional cost.

For all engineering changes (EC) or field changes (FC), the Government will provide Government-furnished information (GFI), i.e., the current Government-approved version of the technical manual(s). The contractor shall develop change pages based on the Government-approved version of the technical manual(s) and the Government will review them for approval in accordance with the requirements of Section 6. The Government reserves the right to use and reproduce the change pages and data contained therein for Government purposes (including competitive acquisitions) at no additional cost.

3.3.2.3 Unit Type 3: 94x110 Broadband RFSM

Upon issuance of a delivery/task order for Phase II the contractor shall fabricate and test a single Unit Type 3 subsystem (94x110 RFSM), or a subset thereof depending on the proposed design modularity. The contractor shall fabricate and test the configuration, as ordered, of the Unit Type 3 subsystem during this phase for compliance with the requirements in this SOW. Upon issuance

of additional delivery/task orders, the contractor shall fabricate and test a complete additional Unit Type 3 subsystem and/or additional modules for the Unit Type 3 subsystem. Collectively, including the initial delivery/task order, the government may issue delivery/task orders for up to two entire Unit Type 3 subsystems.

3.3.2.3.1 Simulator/Emulator

Within one month of award, the contractor shall deliver a software-based simulator. The simulator shall be capable of simulating the software-based control interface and conform to the final ICD; it need not provide any RF switching capability. The government shall be able to communicate with the simulator, issue software commands to the simulator and receive (software-generated) status messages from the simulator.

3.3.2.3.2 Test, Evaluation, and Delivery

The contractor shall demonstrate full compliance of all equipment and software with the A-level Performance Specifications through factory acceptance testing (FAT).

Within 16 weeks after issuance of the delivery/task order for Phase II, the contractor shall submit to the government a draft Factory Acceptance Test (FAT) plan for the Unit Type 3 subsystem and modules (CDRL A018) for review, comment, and recommend revisions. The FAT plan shall be a high-level test plan that specifies testing to assess compliance with the requirements of the A-level Performance Specification and provides the format(s) for test results. The government shall submit its recommended revisions to the contractor within 30 days after receipt. The contractor shall prepare and submit for approval a finalized FAT plan within 15 days after receiving the government response. Upon receipt of the contractor's finalized FAT plan, the government shall make any appropriate changes and distribute the final approved FAT plan.

Within 24 weeks after the delivery/task order for Phase II is issued, the contractor shall complete testing of the Unit Type 3 subsystem and modules in accordance with the approved FAT plan and deliver the test report signed by the contractor's project manager to the government (CLIN A019). Testing shall, at option of the Government, be witnessed by an NRL representative. If any specification shortfalls are identified during testing, all such shortfalls shall be addressed and the item retested. All unresolved specification shortfalls shall be identified in the test report along with the proposed corrective action.

Delivery of the first Unit Type 3 subsystems and/or components that have been tested shall be made within 28 weeks of the issuance of the delivery/task order for Phase II. The contractor shall deliver with the first Unit Type 3 subsystems and/or modules the Report covering any required FAT retesting.

The contractor shall furnish a spares and replacement parts list (CDRL A020) for the Unit Type 3 subsystem and modules, which shall list the best estimate of all parts needed for maintaining

the system for a period of 3 years or 20,000 hours of operation, whichever is less. This list shall include sufficient information for procurement of spares and replacement parts, including sources and the quantity of recommended parts/modules.

3.3.2.3.3 Drawing Packages

The contractor shall provide a drawings and supporting documentation (CDRL A021) to support the installation and service of all procured equipment. The drawing package shall include the following:

a. Recommended installation criteria
b. Recommended installation test and verification procedures and requirements
c. Installation instructions
d. Weight and physical dimensions of each system
e. Power requirements for each power interface to external power
f. Cabling diagrams and connector pin-outs of all external interfaces and significant internal interfaces
g. Any additional information necessary for accurate interface control

The Government also reserves the right to use the drawing package and data contained therein to competitively acquire replacement parts and spares at no additional cost to the Government.

3.3.2.3.4 Technical Manuals

The contractor shall provide technical manuals in accordance with the requirements of Section 6, Appendix A: System Technical Manual. The contractor shall submit technical manuals for approval by the Government as per CDRL A022. Materials submitted for approval shall include all technical documentation for the installation, service, troubleshooting and operation of the RF Distribution Subsystems and Modules addressed by this SOW. The Government shall review the material in accordance with the requirements of Section 6 and CDRL A022. If the government determines that additional data is required to meet the requirements, the contractor shall submit supplemental documentation for approval as per CDRL A022. The Government reserves the right to use and reproduce the technical manuals and data contained therein for Government purposes (including competitive acquisitions) at no additional cost.

For all engineering changes (EC) or field changes (FC), the Government will provide Government-furnished information (GFI), i.e., the current Government-approved version of the technical manual(s). The contractor shall develop change pages based on the Government-approved version of the technical manual(s) and the Government will review them for approval in accordance with the requirements of Section 6. The Government reserves the right to use and reproduce the change pages and data contained therein for Government purposes (including competitive acquisitions) at no additional cost.

3.3.2.4 Support Services, All Unit Types

The contractor shall propose a fee structure for up to 3 years. The scope shall cover all Unit Types, including hourly rates for future logistic support and replacement, as well as local (at the contractor facility) and on-site repair.

Identifier	Name	Description
A001	Quarterly Reports	The contractor shall provide technical and financial summary reports.
A008	Factory Acceptance Test Plan	Factory Acceptance Test Plan for Unit Type 1
A009	Factory Acceptance Test Report	Factory Acceptance Test Report from FAT for Unit Type
A010	Spares and Replacement Parts List	Spare and Replacement Parts List for Unit Type 1
A011	Installation Drawing Package	Installation Drawing Package for Unit Type 1
A012	System Technical Manuals	System Technical Manuals for Unit Type 1
A013	Factory Acceptance Test Plan	Factory Acceptance Test Plan for Unit Type 2
A014	Factory Acceptance Test Report	Factory Acceptance Test Report from FAT for Unit Type 2
A015	Spares and Replacement Parts List	Spare and Replacement Parts List for Unit Type 2
A016	Installation Drawing Package	Installation Drawing Package for Unit Type 2
A017	System Technical Manuals	System Technical Manuals for Unit Type 2
A018	Factory Acceptance Test Plan	Factory Acceptance Test Plan for Unit Type 3
A019	Factory Acceptance Test Report	Factory Acceptance Test Report from FAT for Unit Type 3

Identifier	Name	Description
A020	Spare and Replacement Parts List	Spare and Replacement Parts List for Unit Type 3
A021	Installation Drawing Package	Installation Drawing Package for Unit Type 3
A022	System Technical Manuals	System Technical Manuals for Unit Type 3

Table 3-3: Phase II CDRLs

3.3.2.5 Anticipated Travel

The contractor shall be expected to travel once during Phase II to Washington, DC, for a formal meeting or informal technical exchange meeting. Other meetings shall be hosted at the contractor's facility.

3.3.2.6 Government responsibilities

If the government determines that the hardware deliverables are to be delivered as rack-mounted turnkey systems, the government will furnish the contractor with the necessary quantity of racks as GFE within one month of issuing a delivery/task order for Phase II.

3.3.3 Support Services

3.3.3.1 Support: Year 1

The contractor shall provide local (at the contractor facility) and on-site (at locations specified by NRL) support services, including material, labor, and travel for repair at locations outside the contiguous United States (OCONUS) as specified by the government.

3.3.3.2 Support: Year 2

The contractor shall provide local (at the contractor facility) and on-site (at locations specified by NRL) support services, including material, labor, and travel for repair at locations outside the contiguous United States (OCONUS) as specified by the government.

3.3.3.3 Support: Year 3

The contractor shall provide local (at the contractor facility) and on-site support services, including material, labor, and travel for repair at locations outside the contiguous United States (OCONUS) as specified by the government.

4 Quality Assurance Provisions

The contractor shall satisfy the qualification requirements for the SCDS subsystems defined by this SOW using the qualification methods as defined Section 4.1 of this document. As part of their response to this solicitation, the offeror shall revise and complete the Qualification Cross-Reference Table (Table 8-1). Specifically, for each requirement in the A-level performance specifications, the “Validation Method” column shall be filled out with one of the four qualification test methods listed below. Where it is felt that a specified requirement does not have an applicable test method, it shall be marked with the abbreviation “N/A” (not applicable). The Government retains the right to review, approve, and witness all test procedures/testing for verification purposes.

4.1 Qualification Test Methods

Approved test procedures shall include verification methods consisting of analysis, inspection, demonstration, and test, defined as follows:

a. ***Analysis*** involves verifying that an item meets the specified requirements by a technical evaluation of any one or a combination of equations, computer models, charts, circuit diagrams, drawings, or representative data.
b. ***Inspection*** involves visually checking the item for proper workmanship, assembly and fit, mechanical safety, marking, materials, parts, etc. This may also involve checking vendor documentation to ensure that vendor results for purchased items meet the associated requirements.
c. ***Demonstration*** involves the operation, movement, or adjustment of an item without the recording of quantitative data. Acceptability of the item is determined by the comparison of the data with pre-established quantitative requirements and tolerances.
d. ***Test*** involves the operation of an item and requires the instrumentation of an item and the recording and evaluation of quantitative data. Acceptability of the item is determined by the comparison of the data with pre-established requirements and tolerances.

5 Preparation for Delivery

5.1 Preparation for Shipment

Equipment shall be adequately packaged to ensure protection against corrosion, deterioration, and physical damage during shipment. At a minimum, it shall be packaged in accordance with the packaging standards defined in ASTM D3951, Standard Practice for Commercial Packaging.

5.2 Packaging and Packing of Spare Parts

Packaging of spare parts shall be in accordance with MIL-P-116, Level A, Method 1A8. Packaging containers shall conform to the carrier rules and regulations applicable to the mode of transportation used.

5.3 Prohibited Packing Materials

The use of asbestos, excelsior, newspaper, or shredded paper (all types including waxed paper, computer paper and similar hygroscopic or nonneutral material) for packing material is prohibited. In addition, loose polystyrene is prohibited.

5.4 Marking of Shipments

All shipping containers shall be marked in accordance with MIL-STD-129M, Marking for Shipment and Storage.

5.5 Unpacking Instructions

When applicable, one set of unpacking instructions shall be placed in a heavy waterproof envelope prominently marked “UNPACKING INSTRUCTIONS” and firmly affixed to the outside of the shipping container in a protected location, preferably adjacent to the identification marking. If the instructions cover a set of equipment packed in multiple containers, the instructions shall be affixed to the number one container of the set. When the unpacking instructions are too voluminous to be affixed to the exterior of the container, they shall be placed inside the container and directions for locating them shall be provided in an envelope marked “UNPACKING INFORMATION”. When unpacking instructions are provided, the shipping containers shall be stenciled “CAUTION—THIS EQUIPMENT MAY BE SERIOUSLY DAMAGED UNLESS UNPACKING INSTRUCTIONS ARE CAREFULLY FOLLOWED. UNPACKING INSTRUCTIONS ARE LOCATED (state where located)”. When possible, this marking shall be applied adjacent to the equipment identification marking on the side of the container.

6 Appendix A: System Technical Manual

6.1 General Requirements

The System Technical Manual (STM) shall describe the overall operation and maintenance of the system; it shall include all safety requirements, labels, hazards, warnings, and precautions pertaining to the system.

6.2 Overall System Functional Description

An overall functional description of each subsystem within the system also shall be provided. The description provided shall include, at a minimum, a one-line diagram showing signal flow through the subsystems, and specification control drawing (SCD) for each subsystem with sufficient detail for procurement of spares and replacements from future vendors. The overall system functional description also shall contain information describing the interfacing with other systems provided by the ship.

6.3 Operation

The STM shall contain the procedures to turn the system on, to perform tests to ensure proper system operation, and the proper sequence to shut down the system without causing harm to personnel or equipment.

The STM shall describe the operational features and capabilities and how to configure the equipment to achieve each of those capabilities.

The STM shall provide descriptions of fault indications and fault codes and associated troubleshooting procedures, flowcharts, and fault logic diagrams.

6.4 Maintenance

The STM shall contain all the information necessary to install the system, including site preparation, space requirements, power requirements, and wire runs, including cable designator and function. The STM shall include unpacking/packing and inspection of all equipment. The STM shall contain detailed information for installation of individual subsystems.

The STM shall include but not be limited to a detailed wiring diagram showing the input and output of all major subsystems within the system and external interfaces. The diagram shall include all system interface cable designations and all cable connections and their plug and/or jack pin-outs.

The STM shall provide any recommended scheduled maintenance procedures and performance tests.

The STM shall document any troubleshooting procedures and system-level fault logic diagrams that would assist in isolating a problem to a subsystem, module, or component. The STM shall reference and provide troubleshooting or removal and replacement procedures for any component intended to be field-serviceable. Troubleshooting to the system level can be achieved by but not be limited to built-in-test equipment (BITE) or signal tracing using standard Navy test equipment.

6.5 Logistic Support

The STM shall list all special and general test equipment and tools necessary to troubleshoot and repair to the system and subsystem level.

The STM shall provide a top-down description of all subsystems and modules.

The STM shall limit the parts identified in the manual to the system and subsystem level. The parts list shall include noun name of the part, commercial part number, quantity, and locations where required.

The STM shall contain a list of the system's wiring interfaces that include each cable function, commercial wire type, and special handling and environmental requirements.

6.6 Schematics, Drawings, and Tables

The STM shall provide system-level wiring diagrams in enough detail to identify each cable and each wire in the cable; the signal and/or power provided by that wire; identification of wire and cable connector terminations, plugs, jacks, and/ or pins; and any wires not used within the cable.

The STM shall include system diagrams in enough detail to identify system-level test points and shall identify expected signal and/or voltage levels at each test point. Actual pictures of an oscilloscope during system testing are desired in this diagram. The test points and normal signal levels shall accurately reflect the procedures for system troubleshooting.

The STM shall include a bill of materials (BOM).

7 Appendix B: A-Level Performance Specifications

Note to offerors: The following changes were made to Section 7 after the posting of the draft solicitation: (1) The goal for category "Platform I/F," requirement 0X-410-001, in Table 7–2 was changed from "T/O" to "T"; (2) Section 7.1.2.1 and Table 7–5 were changed to include physical interfaces; and (3) Section 7.1.3.1 and Table 7–10 were changed to include physical interfaces.

This section presents A-level specification requirements for the three SCDS system elements (SEs) germane to this RFP. These specifications are intended to be general enough so as to be independent of any specific implementation and/or design. The contractor shall expand upon these specifications in more detailed, implementation-specific design documentation. Each SE shall be in accordance with all Threshold (**T**) goals. Meeting or exceeding Objective (**O**) goals is not mandatory, but may result in a more favorable approach evaluation.

7.1.1 Common

7.1.1.1 System Modes and States

All constituent SEs will have two states (OFF and ON). Within the ON state, there are two modes (COMMAND and POLL). Requirements concerning States and Modes are summarized below in Table 7-1.

Category	Req't #	Description	Goal (T/O)
Mode/OFF	0X-400-001	In the OFF State, the SEs shall be powered off	T/O
Mode/ON: COMMAND	0X-400-002	In the ON State, the SEs shall accept and execute requests via the control interface to configure switch connectivity and to control integral variable attenuators, if applicable.	T/O
Mode/ON: POLL	0X-400-003	In the ON State, the SEs shall accept and execute requests to report switch position/status.	T/O
Mode/ON: POLL	0X-400-004	In the ON State, the SEs shall accept and execute requests to report values of any integral power threshold detectors or variable attenuators.	T/O

Table 7-1: Common SE States and Modes Specifications

7.1.1.2 Physical/Environmental

Specifications pertaining to physical and environmental parameters are displayed in Table 7-2.

Category	Req't #	Description	Goal (T/O)
Remote	0X-402-002	The SE shall have an Ethernet interface for monitoring of health and status: 100 Mb/s or above	T/O
Alignment & Cal	0X-404-001	The SE shall support and be capable of calibration to the fullest extent possible	T/O
Health Mon	0X-405-001	The SE shall support health monitoring and built-in testing to the fullest applicable extent possible.	T/O

Platform I/F	0X-410-001	The SE shall be rack-mountable in a standard EIA 19-inch rack or racks using a maximum of 28 RU within each rack.	T
Platform I/F	0X-410-002	The SE shall accept prime power of 110-240 V/50-60 Hz	T/O
Operational Environment	0X-411-006	The SEs shall be designed to operate between +10 and +30 °C.	T
Operational Environment	0X-411-007	The SEs should be designed to operate between +0 and +50 °C.	O
Service Life	0X-412-001	The SE shall be designed for a 35-year service life, through periodic system hardware replacements and technology upgrades	T/O
Op Tempo	0X-413-001	The SE shall be designed to support 280 24-hour days of operation per calendar year	T/O
Safety	0X-414-001	The SE shall be designed to survive in the operating environment without jeopardizing the safety of ship or crew.	T/O
Training	0X-415-001	Manuals shall be provided that contain operation and maintenance details	T/O
Supportability	0X-416-001	The SE shall be designed to support field-servicing to the fullest extent possible	T/O
Clean Power	0X-418-001	The SE should conform to IEC 61000-3-2 for power quality	O

Table 7-2: Common physical and environmental SE Specifications

7.1.1.3 Hardware and Software Interfaces

Common SE specifications pertaining to external interfaces are displayed in Table 7-3.

Category	Req't #	Description	Goal (T/O)
Hardware	0X-1-001	External RF interfaces shall have a characteristic input impedance of 50Ω, regardless of switch configuration.	T/O
Hardware	0X-1-002	External RF interfaces shall utilize SMA connectors	T/O
Hardware	0X-1-003	The SE shall have an RJ45 Ethernet (100 Mb/s or above) port for switch control, switch status, and health monitoring indicators	T/O
Hardware	0X-1-004	SEs shall withstand the application of continuous power levels of at least +30 dBm at external RF input ports with no damage	T/O
Hardware	0X-1-005	The SE shall have an indicator light for DC power	T/O
Hardware	0X-1-006	All external interface connectors shall be located on the back of the SE.	T/O
Software	0X-2-001	All SEs shall have the same software interface	T/O
Software	0X-2-002	Upon request via the Ethernet control interface, the SE shall report the configuration status of an constituent switch	T
Software	0X-2-003	The SE should report every successful completion of a configuration command execution via the Ethernet software control interface	O
Software	0X-2-004	The SE should be capable of running and reporting on internal built-in-tests to assess health/status of internal modules and subsystems	O
Software	0X-2-005	The SE should have a built-in display for indicating configuration, with or without an interface for SE control	O

Table 7-3: Common SE External Interface Specifications

7.1.1.4 Hardware Performance

Common SE specifications pertaining to hardware performance are displayed in Table 7-4.

Category	Req't #	Description	Goal (T/O)
SW/Isolation	0X-1-007	The worst case input-output isolation shall be no less than 60 dB (across all valid frequencies).	T
SW/Isolation	0X-1-008	The worst case input-input isolation shall be no less than 60 dB (across all valid frequencies).	T
SW/Isolation	0X-1-009	The worst case output-output (different input) isolation shall be no less than 60 dB (across all valid frequencies).	T
SW/Isolation	0X-1-010	The worst case output-output (same input) isolation shall be no less than 40 dB (across all valid frequencies).	T
SW/Isolation	0X-1-011	The worst case input-output isolation should be no less than 70 dB (across all valid frequencies).	O
SW/Isolation	0X-1-012	The worst case input-input isolation should be no less than 70 dB (across all valid frequencies).	O
SW/Isolation	0X-1-013	The worst case output-output (different input) isolation should be no less than 70 dB (across all valid frequencies).	O
SW/Isolation	0X-1-014	The worst case output-output (same input) isolation should be no less than 50 dB (across all valid frequencies).	O
RF	0X-1-015	All RF Output Ports shall have an output VSWR no greater than 2.0:1 relative to 50Ω for any valid switch condition.	T/O

Table 7-4: Common SE Hardware Performance Specifications

7.1.2 Unit Type 1: 9x8 RF Switch Matrix

Requirements specific to the 9x8 RF Switch Matrix (RFSM) are shown in Table 7-5 through Table 7-9. A top-level block diagram for the 9x8 RF Switch Matrix (RFSM) is shown in Figure 7-1. As shown in Figure 7-1, the 9x8 RFSM shall accept up to 9 simultaneous input RF signals and shall have eight switch matrix output ports. There shall also be 9 non-switched auxiliary outputs; each one is intended to provide a replica of an input signal. In addition to the Ethernet-based control/status port that is common across the three SCDS SEs, the 9x8 RFSM shall also have three independent hardware-driven control ports (HW Control A, B and C) in order to provide low-latency fast switching for up to three of the eight output ports.

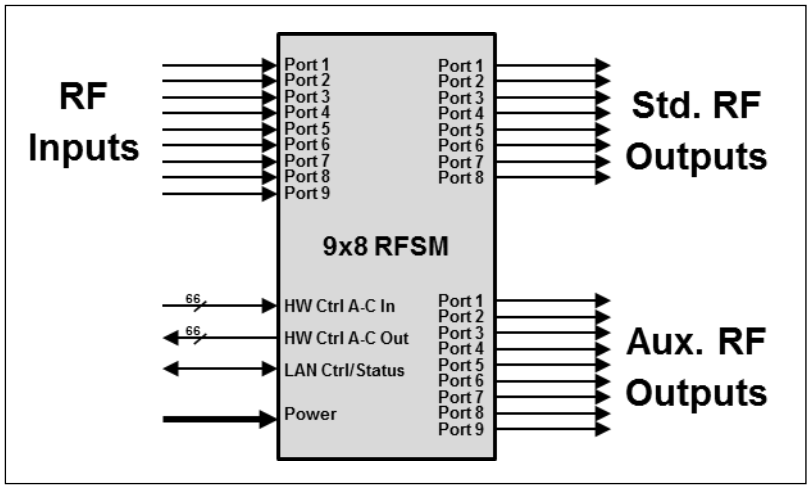

Figure 7-1: 9x8 RFSM Top-Level Diagram

7.1.2.1 External/Physical Interfaces

Specific 9x8 RFSM requirements pertaining to external and physical interfaces are displayed in Table 7-5.

Category	Req't #	Description	Goal (T/O)
External/RF	0A-1-001	The 9x8 RFSM SE shall have the number and type of external RF interfaces as listed in Table 7-6.	T/O
External/RF	0A-1-002	The operational frequency range of the 9x8 RFSM SE external RF interfaces shall contain the operational frequency ranges listed in Table 7-6.	T/O
External/Control	0A-1-003	Connectivity of all Standard Output Ports shall be configurable through the Ethernet control interface.	T/O
External/Control	0A-1-004	The 9x8 RFSM SE shall have a 66-pin input interface for hardware-driven control of the RFSM connectivity using Circular MIL Spec Connector D38999/26FF35PA.	T/O
External/Control	0A-1-005	The hardware-driven control port interface shall have three independent sets (A-C) of fourteen inputs, each consisting of 6 (2 address, 4 data) differential information bits, 1 differential strobe signal and 4 spares.	T/O
External/Control	0A-1-006	The hardware-driven control port input shall accept logic levels compliant with RS-422 differential signals using Positive True logic (High=True=1).	T/O
External/Control	0A-1-007	The hardware-driven control port interface shall be able to configure the connectivity of up to three RFSM standard output ports.	T/O
External/Control	0A-1-008	The particular standard output ports controlled by the hardware-driven control interface shall be configurable through the Ethernet control interface.	T/O
External/Control	0A-1-009	The 9x8 RFSM SE shall have a 66-pin output interface for daisy-chaining the hardware control port signals to additional 9x8 RFSM SEs (RS-422 multi-drop) using Circular MIL Spec Connector D38999/26FF35PA..	T/O
External/Control	0A-1-010	The 66-pin input and output interfaces for hardware-driven control signals shall have the pin-out as shown in Table 7-7	T/O

External/Control	0A-1-011	Each hardware-driven control port (A-C) of the 9x8 RFSM shall determine the input port that is connected to the designated output port per Table 7-8. Note the RFSM configuration shall only be affected when the "address" lines are "0"	T/O
External/Control	0A-1-012	The 9x8 RFSM hardware-driven control shall accept and operate with inputs having timing details shown in Figure 7-2	T/O
Physical	0A-1-027	The 9x8 RFSM SE shall be rack-mountable in a standard EIA 19-inch rack using a maximum of 6 RU.	O

Table 7-5: Specific External Interface Requirements for 9x8 RFSM

Input Ports		**Output Ports**			
		Standard		**Auxiliary**	
Port #	**Frequency Range (GHz)**	**Port #**	**Frequency Range (GHz)**	**Port #**	**Frequency Range (GHz)**
1	0.1 - 4	1	0.1 - 18.25	1	0.1 - 4
2	0.25 – 1.3	2	0.1 - 18.25	2	0.25 – 1.3
3	0.75 – 2.25	3	0.1 - 18.25	3	0.75 – 2.25
4	1.75 – 4.25	4	0.1 - 18.25	4	1.75 – 4.25
5	3.75 – 8.25	5	0.1 - 18.25	5	3.75 – 8.25
6	7.75 – 12.25	6	0.1 - 18.25	6	7.75 – 12.25
7	11.75 – 18.25	7	0.1 - 18.25	7	11.75 – 18.25
8	2 - 18	8	0.1 - 18.25	8	2 - 18
9	2 - 18			9	2 - 18

Table 7-6: 9x8 RFSM Port and Frequency Plan (see Req'ts 0A-1-001 and 0A-1-002)

Pin	Control Channel	Signal	Bit	Pin	Control Channel	Signal	Bit	Pin	Control Channel	Signal	Bit
1	A	Address	1 (MSB)-	15	B	Address	1 (MSB)-	29	C	Address	1 (MSB)-
2	A	Address	1 (MSB)+	16	B	Address	1 (MSB)+	30	C	Address	1 (MSB)+
3	A	Address	0 (LSB)-	17	B	Address	0 (LSB)-	31	C	Address	0 (LSB)-
4	A	Address	0 (LSB)+	18	B	Address	0 (LSB)+	32	C	Address	0 (LSB)+
5	A	Data	3 (MSB)-	19	B	Data	3 (MSB)-	33	C	Data	3 (MSB)-
6	A	Data	3 (MSB)+	20	B	Data	3 (MSB)+	34	C	Data	3 (MSB)+
7	A	Data	2-	21	B	Data	2-	35	C	Data	2-
8	A	Data	2+	22	B	Data	2+	36	C	Data	2+
9	A	Data	1-	23	B	Data	1-	37	C	Data	1-
10	A	Data	1+	24	B	Data	1+	38	C	Data	1+
11	A	Data	0 (LSB)-	25	B	Data	0 (LSB)-	39	C	Data	0 (LSB)-
12	A	Data	0 (LSB)+	26	B	Data	0 (LSB)+	40	C	Data	0 (LSB)+
13	A	Strobe	0-	27	B	Strobe	0-	41	C	Strobe	0-
14	A	Strobe	0+	28	B	Strobe	0+	42	C	Strobe	0+
								43-66	A-C	Spares	N/A

Table 7-7: 9x8 RFSM Hardware-Driven Control Ports: 66-pin Pin-out

Address[1:0]	Function	Data[3:0]	Selected Input Port
0	Select Input Port	0	1
0		1	2
0		2	3
0		3	4
0		4	5
0		5	6
0		6	7
0		7	8
0		8	9
1-3	None	N/A	N/A

Table 7-8: 9x8 RFSM Hardware-Driven Control Port Commands

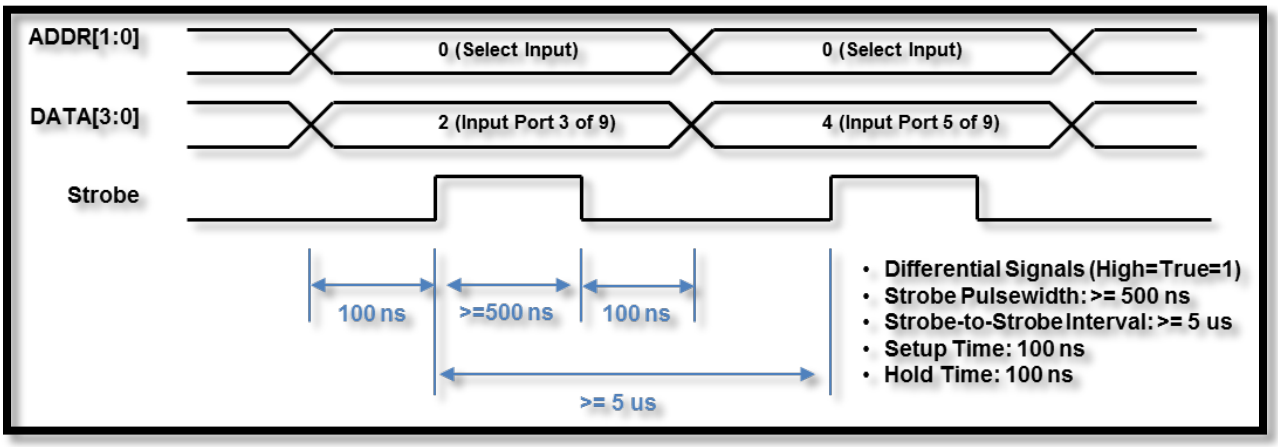

Figure 7-2: 9x8 RFSM Hardware-Driven Control Port Timing Information

7.1.2.2 Hardware/Performance

Specific 9x8 RFSM requirements pertaining to functionality and performance are displayed in Table 7-9.

Category	Req't #	Description	Goal (T/O)
Configuration	0A-1-013	For Standard Outputs, the 9x8 RFSM SE shall be full fan-out and non-blocking (any input to any or all outputs).	T/O
Configuration	0A-1-014	Auxiliary Outputs shall always be enabled (in ON State).	T/O
Switch/Speed	0A-1-015	The switching speed, via parallel (hardware-driven) control interface, shall be no more than 100 ns.	T/O
Switch/Speed	0A-1-016	The switching speed, via Ethernet (software) control interface, shall be no more than 100 ms, including control delay.	T/O
RF	0A-1-017	The RF gain from any input port to any standard output port shall be within the window of 10±2 dB.	T/O
RF	0A-1-018	The RF gain from any input port to any auxiliary output port shall be within the window of 0±1 dB.	T/O
RF	0A-1-019	The worst case Noise Figure shall be no greater than 5 dB.	T/O
RF	0A-1-020	The worst case output 3rd order intercept point (OIP3) for Standard Outputs shall be no less than +20 dBm.	T/O
RF	0A-1-021	The worst case output 1 dB compression point (OP1dB) for Standard Outputs shall be no less than +10 dBm.	T
RF	0A-1-022	The worst case output 1 dB compression point (OP1dB) for Standard Outputs should be no less than +14 dBm.	O
RF	0A-1-023	Input Ports 8 and 9 shall have an input VSWR no greater than 2.5:1 relative to 50Ω for any valid switch condition.	T/O
RF	0A-1-024	Input Ports 1 through 7 shall have an input VSWR no greater than 2.0:1 relative to 50Ω for any valid switch condition.	T/O
Health	0A-1-025	The 9x8 RFSM SE shall be able to determine and indicate whether or not the RF power level in each of the 9 input paths and in each of the 8 standard output paths is above or below a pre-designated threshold. The government shall specify the threshold power-level after a contract is awarded.	T
Health	0A-1-026	The 9x8 RFSM SE should be able to measure the absolute RF power level in each of the 9 input paths and in each of the 8 standard output paths to within ±3 dB.	O

Table 7-9: Specific Hardware/Performance Requirements for 9x8 RFSM

7.1.3 Unit Type 2: Ganged 2x1 Switches

Requirements specific to the Ganged 2x1 Switches are shown in Table 7-10 through Table 7-12. A top-level block diagram for this SE is shown in Figure 7-3. The Ganged 2x1 Switches shall function as 8 independent 2x1 switches that all share the same control interface.

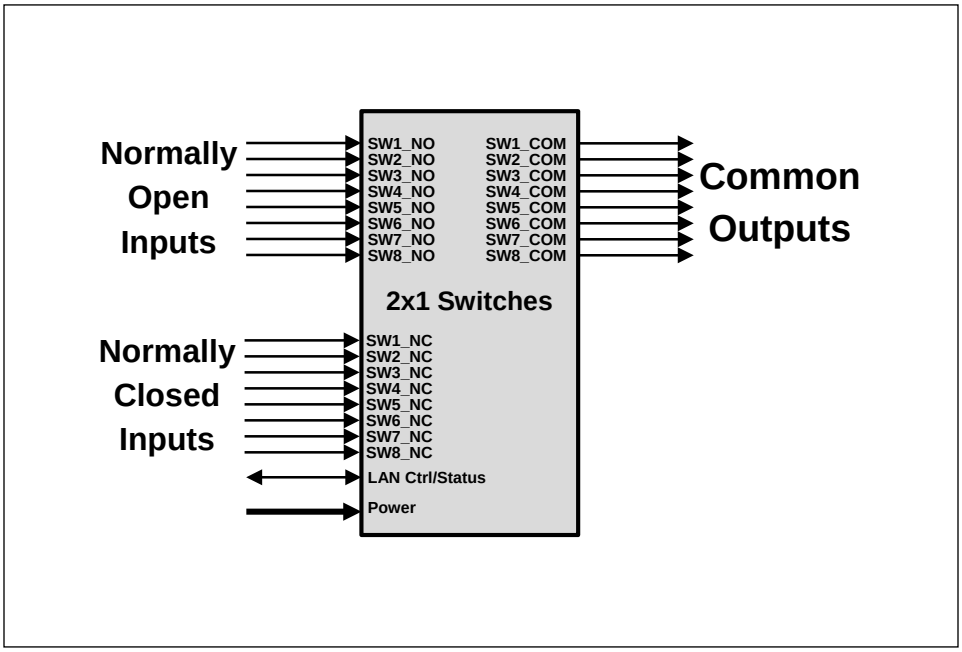

Figure 7-3: Ganged 2x1 Switches Top-Level Diagram

7.1.3.1 External/Physical Interfaces

Specific requirements for the Ganged 2x1 Switches pertaining to external and physical interfaces are displayed in Table 7-10.

Category	Req't #	Description	Goal (T/O)
External/RF	0B-1-001	The Ganged 2x1 Switches SE shall have eight "normally open" inputs, each with an operational frequency range of at least 0.1 to 18.25 GHz	T/O
External/RF	0B-1-002	The Ganged 2x1 Switches SE shall have eight "normally closed" inputs, each with an operational frequency range of at least 0.1 to 18.25 GHz	T/O
External/RF	0B-1-003	The Ganged 2x1 Switches SE shall have eight "common" outputs, each with an operational frequency range of at least 0.1 to 18.25 GHz	T/O
Physical	0B-1-013	The Ganged 2x1 Switches SE shall be rack-mountable in a standard EIA 19-inch rack using a maximum of 1 RU.	O

Table 7-10: Specific External Interface Requirements for Ganged 2x1 Switches

7.1.3.2 Hardware/Performance

Specific 2x1 Ganged Switch requirements pertaining to functionality and performance are displayed in Table 7-11.

Category	Req't #	Description	Goal (T/O)
Configuration	0B-1-004	The SE shall function as 8 independent 2x1 switches	T/O
Switch/Speed	0B-1-005	The switching speed, via Ethernet (software) control interface shall be no more than 100 ms, including control delay.	T/O
RF	0B-1-006	The highest RF loss from either input port to the output port shall be no more than 2.5 dB	T/O
RF	0B-1-007	The lowest RF loss from either input port to the output port shall be no more than 2 dB less than the highest loss.	T/O
RF	0B-1-008	The worst case Noise Figure shall be no greater than 3 dB	T/O
RF	0B-1-009	The worst case output 3rd order intercept point (OIP3) shall be no less than +20 dBm	T/O
RF	0B-1-010	The worst case input 1 dB compression point (IP1dB) shall be no less than +10 dBm	T
RF	0B-1-011	The worst case input 1 dB compression point (IP1dB) should be no less than +14 dBm	O
RF	0B-1-012	Every input shall have an input VSWR no greater than 1.5:1 relative to 50Ω for any valid switch condition.	T/O

Table 7-11: Specific Hardware/Performance Requirements for Ganged 2x1 Switches

7.1.3.3 Software

Specific 2x1 Ganged Switch requirements pertaining to software are displayed in Table 7-12.

Category	Req't #	Description	Goal (T/O)
Software/Control	0B-2-001	Connectivity of all eight switches in the SE shall be configurable through a single Ethernet control interface	T/O

Table 7-12: Specific Software Requirements for Ganged 2x1 Switches

7.1.4 Unit Type 3: 94x110 Broadband RF Switch Matrix

Requirements specific to the broadband 94x110 RFSM are shown in Table 7-13 through Table 7-16. A top-level block diagram for this SE is shown in Figure 7-4. The aggregate operational frequency range for both the RF Inputs and RF Outputs covers the range of 2 MHz through 8 GHz. However, individual RF inputs and outputs do not necessarily need to support this entire frequency range. Details concerning the operational frequency range for individual inputs and outputs are shown in Figure 7-5.

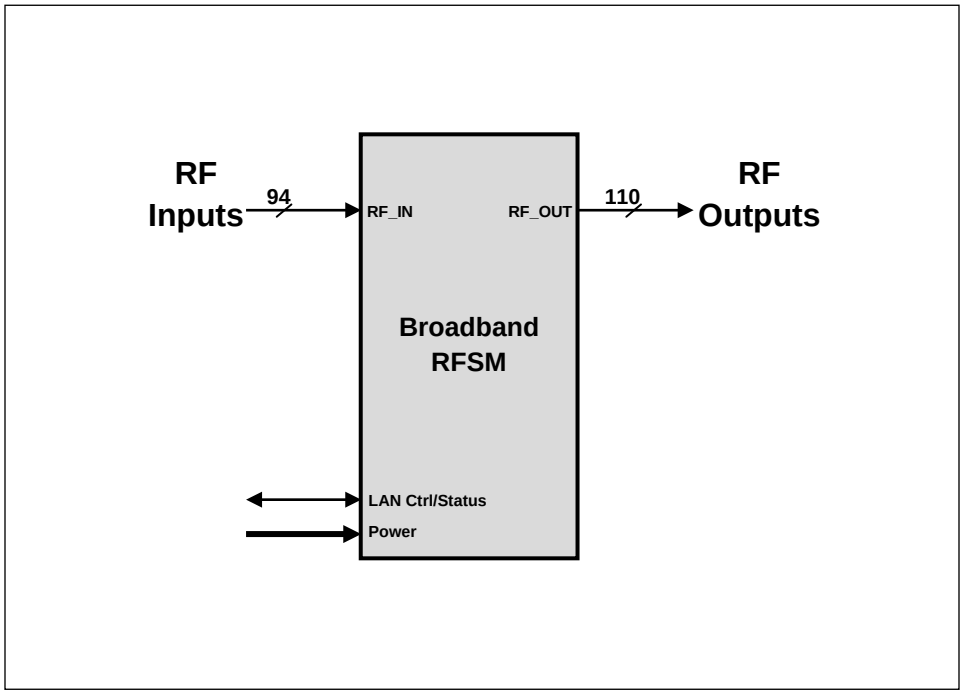

Figure 7-4: Top-Level Diagram for 94x110 Broadband RFSM

7.1.4.1 External Interfaces

Specific requirements for the 94x110 Broadband RFSM pertaining to external interfaces are displayed in Table 7-13.

Category	Req't #	Description	Goal (T/O)
External/RF	0C-1-001	The RF input ports of the 94x110 Broadband RFSM shall be in accordance with Figure 7-5.	T/O
External/RF	0C-1-002	The RF output ports of the 94x110 Broadband RFSM shall be in accordance with Figure 7-5.	T/O

Table 7-13: Specific External Interface Requirements for 94x110 Broadband RFSM

7.1.4.2 Hardware/Performance

Specific 94x110 Broadband RFSM requirements pertaining to functionality and performance are displayed in Table 7-14.

Category	Req't #	Description	Goal (T/O)
Configuration	0C-1-003	The 94x110 RFSM shall be non-blocking.	T/O
Configuration	0C-1-004	The connectivity of the 94x110 RFSM shall be in accordance with Figure 7-5.	T/O
Configuration	0C-1-005	The 94x110 RFSM shall provide full fan-out capability for the connectivity detailed in Figure 7-5 (any input to any or all valid outputs)	T/O
Configuration	0C-1-006	The architecture of the 94x110 RFSM should be modular and scalable so that a partial capability can be fielded initially, to be followed by future build-outs to obtain the full capability (see Figure 7-6).	O
Switch/Speed	0C-1-007	The switching speed, via Ethernet (software) control interface, shall be no more than 500 ms, including control delay.	T
Switch/Speed	0C-1-008	The switching speed, via Ethernet (software) control interface, shall be no more than 250 ms, including control delay.	O
Switch/Speed	0C-1-009	The switching speed for Output System O.D1, via Ethernet (software) control interface, shall be no more than 100 ms, including control delay.	O
RF/Frequency Range	0C-1-010	The operational frequency range for each RF path through the 94x110 RFSM shall be the intersection of the input and output frequency ranges shown in Figure 7-5.	T
RF	0C-1-011	The worst case loss for any valid RF path (input port to output port) shall be no more than 0 dB	T/O
RF	0C-1-012	The worst case gain variation for any single valid RF path shall be no more than 4 dB.	T/O
RF	0C-1-013	The worst case RF Noise Figure for any valid RF path shall be no greater than 23 dB	T
RF	0C-1-014	The worst case RF Noise Figure for any valid RF path should be no greater than 18 dB	O
RF	0C-1-015	The worst case input 1 dB compression point (IP1dB) for any valid RF path shall be no less than 0 dBm	T
RF	0C-1-016	The worst case input 1 dB compression point (IP1dB) for any valid RF path should be no less than +10 dBm	O
RF	0C-1-017	The worst case output 3rd order intercept point (OIP3) for any valid RF path shall be no less than +10 dBm	T/O
RF	0C-1-018	In accordance with Table 7-15, the 94x110 Broadband RFSM shall incorporate at least 40 dB of variable attenuation in specific locations of particular RF paths	T
RF	0C-1-019	In accordance with Table 7-15, the 94x110 Broadband RFSM shall incorporate at least 55 dB of variable attenuation in specific locations of particular RF paths	O
RF	0C-1-020	The integrated variable attenuators of the 94x110 Broadband RFSM shall have a minimum attenuation step size that does not exceed 6 dB.	T/O
Health	0C-1-021	The Broadband RFSM shall be able to determine and indicate whether or not the RF power level in each of the input and output paths is above or below a pre-designated threshold. The government shall specify the threshold power-level after a contract is awarded.	T
Health	0C-1-022	The Broadband RFSM should be able to measure the absolute RF power level in each of the input and output paths to within ±3 dB.	O

Table 7-14: Specific Hardware/Performance Requirements for 94x110 Broadband RFSM

RF Path			Attenuator Information	
Path #	**Input System**	**Attenuated Output System(s)**	**Number/Quantity**	**Placement**
1	I.C7a (24 Inputs)	O.Ax and/or O.B1	Such that for each of the two noted RF Paths, any or all of the inputs shall be able to be attenuated individually	The attenuators in RF Path #1 shall only affect the O.A systems (O.A2-O.A5) and O.B1.
2	I.C7a (24 Inputs)	O.D1		The attenuators in RF Path #2 shall only affect the outputs destined for the O.D1 Output System.

Table 7-15: 94x110 Broadband RFSM Variable Attenuator Details (Req'ts 0C-1-014 through 0C-1-016)

7.1.4.3 Software

Specific 94x110 Broadband RFSM Switch requirements pertaining to software are displayed in Table 7-16.

Category	Req't #	Description	Goal (T/O)
Software/ Control	0C-2-001	Connectivity of the 94x110 Broadband RFSM shall be configurable through a single Ethernet control interface	T/O

Table 7-16: Specific Software Requirements for 94x110 Broadband RFSM

		Output System	O.A2a	O.A2b	O.A3	O.A4	O.A5	O.B1	O.C1	O.C2	O.C3	O.C6	O.C8	O.D1	O.E2
		# of Outputs	4	4	16	4	6	8	5	16	8	1	1	32	5
		Output Freq. Range (MHz)	2-32	20-3000	2-8000	2-8000	2-8000	100-6000	70-8000	750-1250	120-200	750-1250	750-1250	20-6000	30-250
Input System	# of Inputs	Input Freq. Range (MHz)													
I.A1	6	750-1250		✓	✓	✓	✓	✓							
I.B1	1	100-1000		✓	✓	✓	✓	✓							
I.B1	1	1000-2000		✓	✓	✓	✓	✓							
I.B1	1	2000-4000		✓	✓	✓	✓	✓							
I.B1	1	4000-8000		✓	✓	✓	✓	✓							
I.C2	2	1000-2000		✓	✓	✓	✓								
I.C2	2	2000-4000		✓	✓	✓	✓								
I.C2	2	4000-8000		✓	✓	✓	✓								
I.C4	2	1000-2000												✓	
I.C4	2	2000-4000												✓	
I.C4	2	4000-8000												✓	
I.C7a	24	750-1250		✓	✓	✓	✓	✓		✓		✓	✓	✓	
I.C7b	24	120-200									✓				
I.D4	2	100-1300		✓	✓	✓	✓	✓	✓					✓	
I.E1	2	2-32	✓		✓	✓	✓								
I.E2	1	30-80		✓	✓	✓	✓							✓	✓
I.E3	1	50-1300		✓	✓	✓	✓	✓	✓					✓	✓
I.E4	4	100-1300		✓	✓	✓	✓	✓	✓					✓	✓
I.E5	1	1000-3000		✓	✓	✓	✓	✓	✓					✓	✓
I.E6	1	20-3000												✓	
I.E7	12	80-2000		✓	✓	✓	✓	✓	✓					✓	✓

Figure 7-5: Summary of RF Input, RF Output and Connectivity Requirements for 94x110 Broadband RFSM (see Req'ts 0C-1-004 and 0C-1-005, 0C-1-009, 0c-1-010)

Input System	Freq Range (MHz)	# of Inputs by Build-Out Stage		
		1st	2nd	3rd
I.A1	750-1250	0	0	6
I.B1	100-1000	0	0	1
I.B1	1000-2000	0	0	1
I.B1	2000-4000	0	0	1
I.B1	4000-8000	0	0	1
I.C2	1000-2000	2	2	2
I.C2	2000-4000	2	2	2
I.C2	4000-8000	2	2	2
I.C4	1000-2000	1	2	2
I.C4	2000-4000	1	2	2
I.C4	4000-8000	1	2	2
I.C7a	750-1250	7	8	24
I.C7b	120-200	7	8	24
I.D4	100-1300	2	2	2
I.E1	2-32	2	2	2
I.E2	30-80	1	1	1
I.E3	50-1300	1	1	1
I.E4	100-1300	4	4	4
I.E5	1000-3000	1	1	1
I.E6	20-3000	1	1	1
I.E7	80-2000	0	0	12

Output System	Freq Range (MHz)	# of Outputs by Build-Out Stage		
		1st	2nd	3rd
O.A2a	2-32	4	4	4
O.A2b	20-3000	4	4	4
O.A3	2-8000	16	16	16
O.A4	2-8000	4	4	4
O.A5	2-8000	0	6	6
O.B1	100-6000	4	4	8
O.C1	250-8000	1	1	5
O.C2	750-1250	2	2	16
O.C3	120-200	4	4	8
O.C6	750-1250	0	0	1
O.C8	750-1250	1	1	1
O.D1	20-6000	16	16	32
O.E2	30-250	5	5	5

Figure 7-6: Notional Capability Build-Out Plan
(see Req't 0C-1-006)

8 Appendix C

Note to offerors: The following changes were made to Section 7 after the posting of the draft solicitation: Requirements 0A-1-027 and 0B-1-013 were added to Table 8–1.

8.1 Qualification Cross-Reference Table

The offeror shall complete the Qualification Cross-Reference Table shown below in Table 8-1 as instructed on page 23 of this SOW. The Government has prefilled the validation method it believes is most likely to be used. The offeror shall modify only the "Validation Method" column and shall insert its validation method for each requirement.

Req't #	Description	Validation Method
0X-400-001	In the OFF State, the SEs shall be powered off	Demonstration
0X-400-002	In the ON State, the SEs shall accept and execute requests via the control interface to configure switch connectivity and to control integral variable attenuators, if applicable.	Demonstration
0X-400-003	In the ON State, the SEs shall accept and execute requests to report switch position/status.	Demonstration
0X-400-004	In the ON State, the SEs shall accept and execute requests to report values of any integral power threshold detectors or variable attenuators.	Demonstration
0X-402-002	The SE shall have an Ethernet interface for monitoring of health and status: (100 Mb/s or above)	Demonstration
0X-404-001	The SE shall support and be capable of calibration to the fullest extent possible	Analysis
0X-405-001	The SE shall support health monitoring and built-in testing to the fullest applicable extent possible.	Analysis
0X-410-001	The SE shall be rack-mountable in a standard EIA 19-inch rack or racks using a maximum of 28 RU within each rack.	Demonstration
0X-410-002	The SE shall accept prime power of 110-240 V/50-60 Hz	Demonstration
0X-411-006	The SEs shall be designed to operate between +10 and +30 °C.	Test
0X-411-007	The SEs should be designed to operate between +0 and +50 °C.	Analysis
0X-412-001	The SE shall be designed for a 35-year service life, through periodic system hardware replacements and technology upgrades	Analysis
0X-413-001	The SE shall be designed to support 280 24-hour days of operation per calendar year	Analysis
0X-414-001	The SE shall be designed to survive in the operating environment without jeopardizing the safety of ship or crew.	Analysis
0X-415-001	Manuals shall be provided that contain operation and maintenance details	Inspection
0X-416-001	The SE shall be designed to support field-servicing to the fullest extent possible	Analysis
0X-418-001	The SE should conform to IEC 61000-3-2 for power quality	Analysis
0X-1-001	External RF interfaces shall have a characteristic input impedance of 50W, regardless of switch configuration.	Demonstration
0X-1-002	External RF interfaces shall utilize SMA connectors	Inspection
0X-1-003	The SE shall have an RJ45 Ethernet port (100 Mb/s or above) for switch	Inspection

	control, switch status, and health monitoring indicators	
0X-1-004	SEs shall withstand the application of continuous power levels of at least +30 dBm at external RF input ports with no damage	Test
0X-1-005	The SE shall have an indicator light for DC power	Demonstration
0X-1-006	All external interface connectors shall be located on the back of the SE.	Inspection
0X-2-001	All SEs shall have the same software interface	Demonstration
0X-2-002	Upon request via the Ethernet control interface, the SE shall report the configuration status of an constituent switch	Test
0X-2-003	The SE should report every successful completion of a configuration command execution via the Ethernet software control interface	Test
0X-2-004	The SE should be capable of running and reporting on internal built-in-tests to assess health/status of internal modules and subsystems	Test
0X-2-005	The SE should have a built-in display for indicating configuration, with or without an interface for SE control	Test
0X-1-007	The worst case input-output isolation shall be no less than 60 dB (across all valid frequencies).	Test
0X-1-008	The worst case input-input isolation shall be no less than 60 dB (across all valid frequencies).	Test
0X-1-009	The worst case output-output (different input) isolation shall be no less than 60 dB (across all valid frequencies).	Test
0X-1-010	The worst case output-output (same input) isolation shall be no less than 40 dB (across all valid frequencies).	Test
0X-1-011	The worst case input-output isolation should be no less than 70 dB (across all valid frequencies).	Test
0X-1-012	The worst case input-input isolation should be no less than 70 dB (across all valid frequencies).	Test
0X-1-013	The worst case output-output (different input) isolation should be no less than 70 dB (across all valid frequencies).	Test
0X-1-014	The worst case output-output (same input) isolation should be no less than 50 dB (across all valid frequencies).	Test
0X-1-015	All RF Output Ports shall have an output VSWR no greater than 2.0:1 relative to 50Ω for any valid switch condition.	Test
0A-1-001	The 9x8 RFSM SE shall have the number and type of external RF interfaces as listed in Table 7-6.	Inspection
0A-1-002	The operational frequency range of the 9x8 RFSM SE external RF interfaces shall contain the operational frequency ranges listed in Table 7-6.	Test
0A-1-003	Connectivity of all Standard Output Ports shall be configurable through the Ethernet control interface.	Demonstration
0A-1-004	The 9x8 RFSM SE shall have a 66-pin input interface for hardware-driven control of the RFSM connectivity using Circular MIL Spec Connector D38999/26FF35PA.	Inspection
0A-1-005	The hardware-driven control port interface shall have three independent sets (A-C) of fourteen inputs, each consisting of 6 (2 address, 4 data) differential information bits, 1 differential strobe signal and 4 spares.	Demonstration
0A-1-006	The hardware-driven control port input shall accept logic levels compliant with RS-422 differential signals using Positive True logic (High=True=1).	Demonstration
0A-1-007	The hardware-driven control port interface shall be able to configure the connectivity of up to three RFSM standard output ports.	Demonstration

0A-1-008	The particular standard output ports controlled by the hardware-driven control interface shall be configurable through the Ethernet control interface.	Demonstration
0A-1-009	The 9x8 RFSM SE shall have a 66-pin output interface for daisy-chaining the hardware control port signals to additional 9x8 RFSM SEs (RS-422 multi-drop) using Circular MIL Spec Connector D38999/26FF35PA..	Inspection
0A-1-010	The 66-pin input and output interfaces for hardware-driven control signals shall have the pin-out as shown in Table 7-7	Inspection
0A-1-011	Each hardware-driven control port (A-C) of the 9x8 RFSM shall determine the input port that is connected to the designated output port per Table 7-8. Note the RFSM configuration shall only be affected when the "address" lines are "0"	Inspection
0A-1-012	The 9x8 RFSM hardware-driven control shall accept and operate with inputs having timing details shown in Figure 7-2	Test
0A-1-013	For Standard Outputs, the 9x8 RFSM SE shall be full fan-out and non-blocking (any input to any or all outputs).	Test
0A-1-014	Auxiliary Outputs shall always be enabled (in ON State).	Demonstration
0A-1-015	The switching speed, via parallel (hardware-driven) control interface, shall be no more than 100 ns.	Test
0A-1-016	The switching speed, via Ethernet (software) control interface, shall be no more than 100 ms, including control delay.	Test
0A-1-017	The RF gain from any input port to any standard output port shall be within the window of 10±2 dB.	Test
0A-1-018	The RF gain from any input port to any auxiliary output port shall be within the window of 0±1 dB.	Test
0A-1-019	The worst case Noise Figure shall be no greater than 5 dB.	Test
0A-1-020	The worst case output 3rd order intercept point (OIP3) for Standard Outputs shall be no less than +20 dBm.	Test
0A-1-021	The worst case output 1 dB compression point (OP1dB) for Standard Outputs shall be no less than +10 dBm.	Test
0A-1-022	The worst case output 1 dB compression point (OP1dB) for Standard Outputs should be no less than +14 dBm.	Test
0A-1-023	Input Ports 8 and 9 shall have an input VSWR no greater than 2.5:1 relative to 50Ω for any valid switch condition.	Test
0A-1-024	Input Ports 1 through 7 shall have an input VSWR no greater than 2.0:1 relative to 50Ω for any valid switch condition.	Test
0A-1-025	The 9x8 RFSM SE shall be able to determine and indicate whether or not the RF power level in each of the 9 input paths and in each of the 8 standard output paths is above or below a pre-designated threshold. The government shall specify the threshold power-level after a contract is awarded.	Test
0A-1-026	The 9x8 RFSM SE should be able to measure the absolute RF power level in each of the 9 input paths and in each of the 8 standard output paths to within ±3 dB.	Test
0A-1-027	The 9x8 RFSM SE shall be rack-mountable in a standard EIA 19-inch rack using a maximum of 6 RU.	Inspection
0B-1-001	The Ganged 2x1 Switches SE shall have eight "normally open" inputs, each with an operational frequency range of at least 0.1 to 18.25 GHz	Test
0B-1-002	The Ganged 2x1 Switches SE shall have eight "normally closed" inputs,	Test

	each with an operational frequency range of at least 0.1 to 18.25 GHz	
0B-1-003	The Ganged 2x1 Switches SE shall have eight “common” outputs, each with an operational frequency range of at least 0.1 to 18.25 GHz	Test
0B-1-004	The SE shall function as 8 independent 2x1 switches	Demonstration
0B-1-005	The switching speed, via Ethernet (software) control interface shall be no more than 100 ms, including control delay.	Test
0B-1-006	The highest RF loss from either input port to the output port shall be no more than 2.5 dB	Test
0B-1-007	The lowest RF loss from either input port to the output port shall be no more than 2 dB less than the highest loss.	Test
0B-1-008	The worst case Noise Figure shall be no greater than 3 dB	Test
0B-1-009	The worst case output 3rd order intercept point (OIP3) shall be no less than +20 dBm	Test
0B-1-010	The worst case input 1 dB compression point (IP1dB) shall be no less than +10 dBm	Test
0B-1-011	The worst case input 1 dB compression point (IP1dB) should be no less than +14 dBm	Test
0B-1-012	Every input shall have an input VSWR no greater than 1.5:1 relative to 50Ω for any valid switch condition.	Test
0B-1-013	The Ganged 2x1 Switches SE shall be rack-mountable in a standard EIA 19-inch rack using a maximum of 1 RU.	Inspection
0B-2-001	Connectivity of all eight switches in the SE shall be configurable through a single Ethernet control interface	Demonstration
0C-1-001	The RF input ports of the 94x110 Broadband RFSM shall be in accordance with Figure 7-5.	Analysis
0C-1-002	The RF output ports of the 94x110 Broadband RFSM shall be in accordance with Figure 7-5.	Analysis
0C-1-003	The 94x110 RFSM shall be non-blocking.	Test
0C-1-004	The connectivity of the 94x110 RFSM shall be in accordance with Figure 7-5.	Test
0C-1-005	The 94x110 RFSM shall provide full fan-out capability for the connectivity detailed in Figure 7-5. (any input to any or all valid outputs)	Test
0C-1-006	The architecture of the 94x110 RFSM should be modular and scalable so that a partial capability can be fielded initially, to be followed by future build-outs to obtain the full capability (see Figure 7-6).	Analysis
0C-1-007	The switching speed, via Ethernet (software) control interface, shall be no more than 500 ms, including control delay.	Test
0C-1-008	The switching speed, via Ethernet (software) control interface, shall be no more than 250 ms, including control delay.	Test
0C-1-009	The switching speed for Output System O.D1, via Ethernet (software) control interface, shall be no more than 100 ms, including control delay.	Test
0C-1-010	The operational frequency range for each RF path through the 94x110 RFSM shall be the intersection of the input and output frequency ranges shown in Figure 7-5.	Test
0C-1-011	The worst case loss for any valid RF path (input port to output port) shall be no more than 0 dB	Test
0C-1-012	The worst case gain variation for any single valid RF path shall be no	Test

	more than 4 dB.	
0C-1-013	The worst case RF Noise Figure for any valid RF path shall be no greater than 23 dB	Test
0C-1-014	The worst case RF Noise Figure for any valid RF path should be no greater than 18 dB	Test
0C-1-015	The worst case input 1 dB compression point (IP1dB) for any valid RF path shall be no less than 0 dBm	Test
0C-1-016	The worst case input 1 dB compression point (IP1dB) for any valid RF path should be no less than +10 dBm	Test
0C-1-017	The worst case output 3rd order intercept point (OIP3) for any valid RF path shall be no less than +10 dBm	Test
0C-1-018	In accordance with Table 7-15, the 94x110 Broadband RFSM shall incorporate at least 40 dB of variable attenuation in specific locations of particular RF paths	Test
0C-1-019	In accordance with Table 7-15, the 94x110 Broadband RFSM shall incorporate at least 55 dB of variable attenuation in specific locations of particular RF paths	Test
0C-1-020	The integrated variable attenuators of the 94x110 Broadband RFSM shall have a minimum attenuation step size that does not exceed 6 dB.	Test
0C-1-021	The Broadband RFSM shall be able to determine and indicate whether or not the RF power level in each of the input and output paths is above or below a pre-designated threshold. The government shall specify the threshold power-level after a contract is awarded.	Test
0C-1-022	The Broadband RFSM should be able to measure the absolute RF power level in each of the input and output paths to within ±3 dB.	Test
0C-2-001	Connectivity of the 94x110 Broadband RFSM shall be configurable through a single Ethernet control interface.	Demonstration

Table 8-1: Qualification Cross-Reference Table