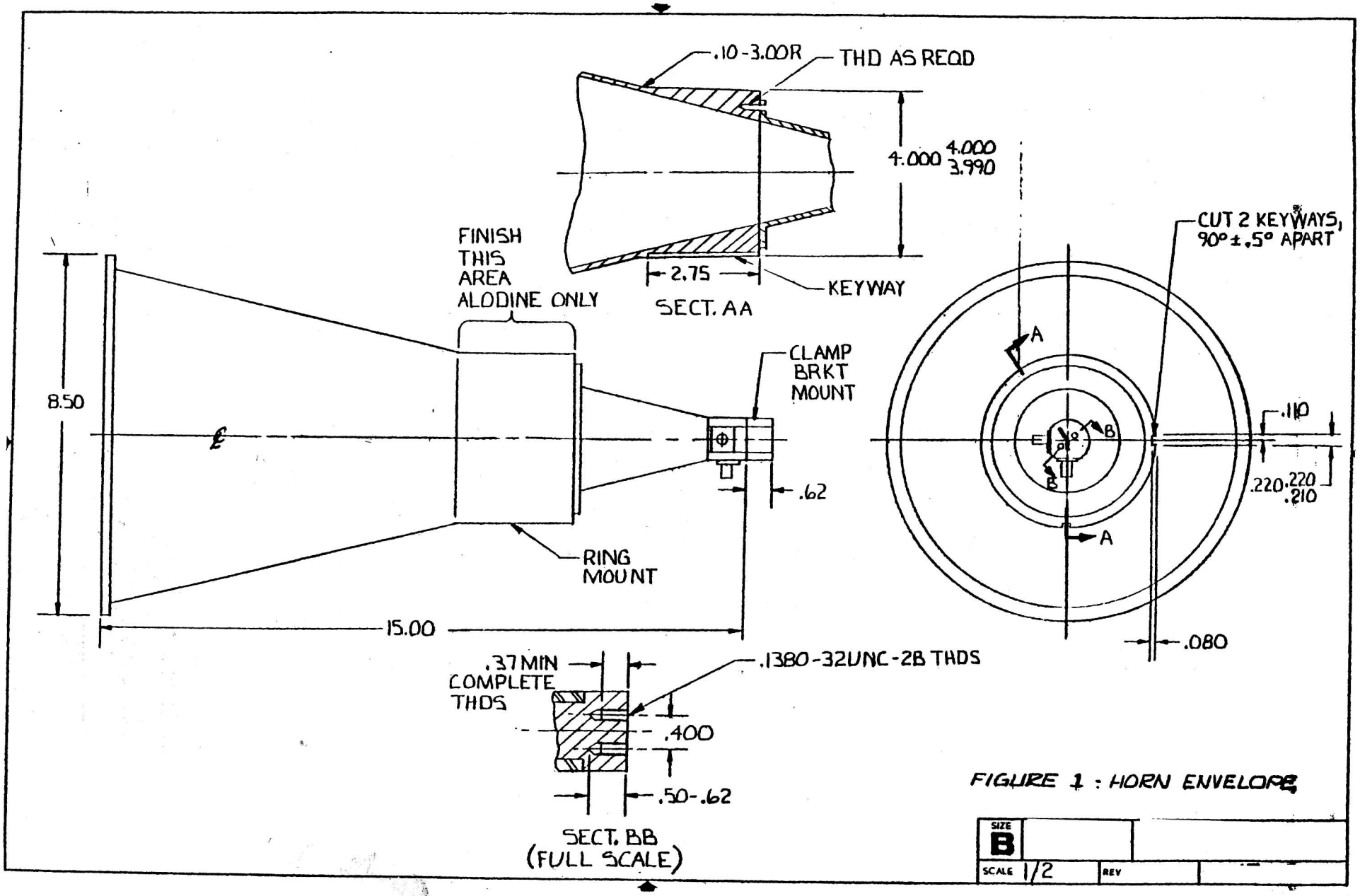

FIGURE 1 : HORN ENVELOPE