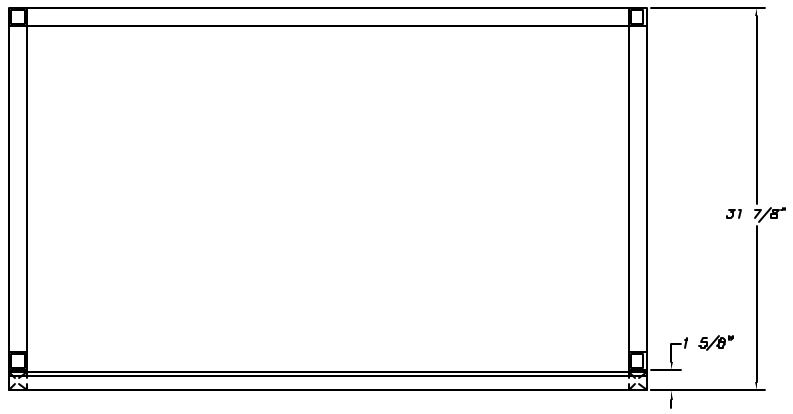

SECTION "B-B"

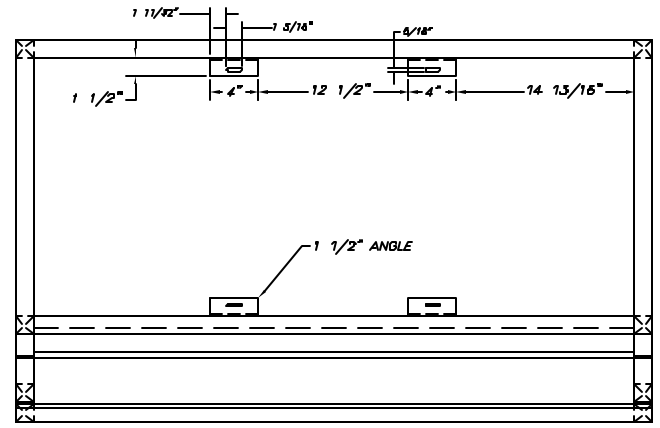

TOP

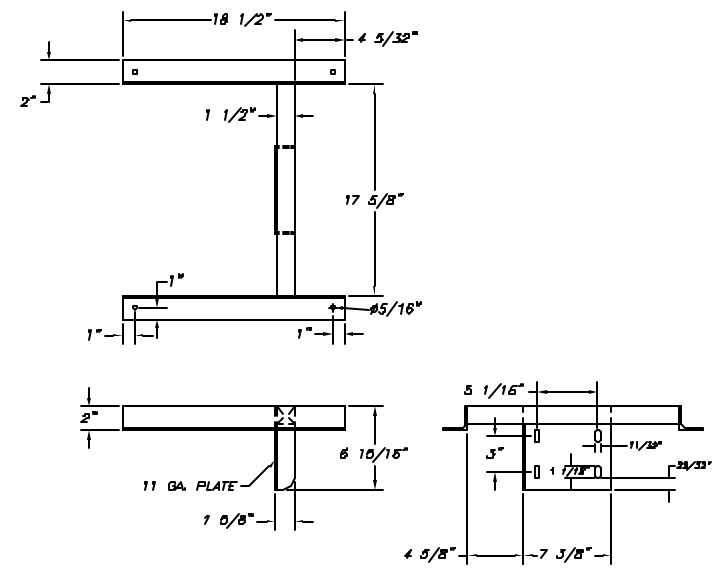

BLOWER MOUNT DETAIL

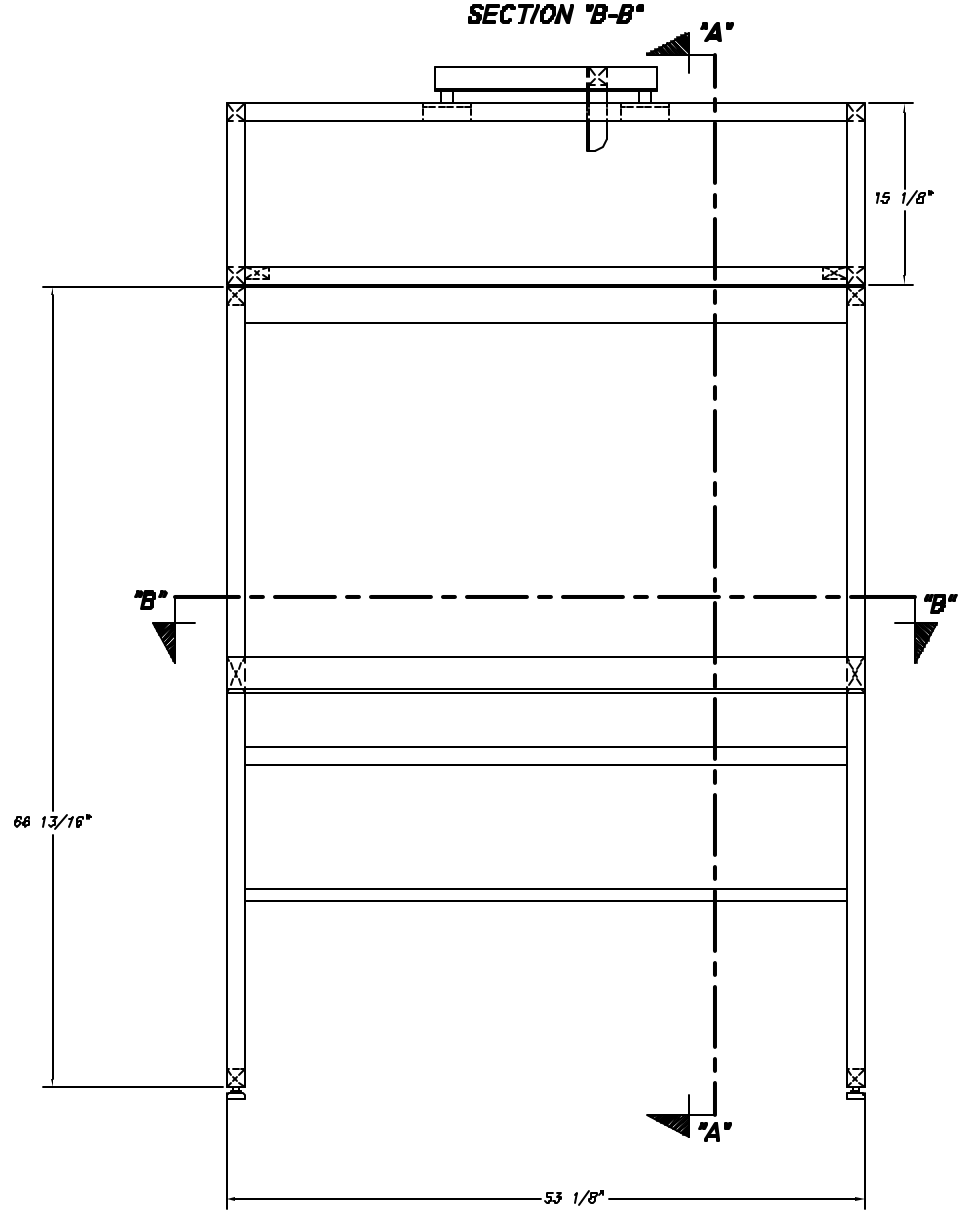

FRONT

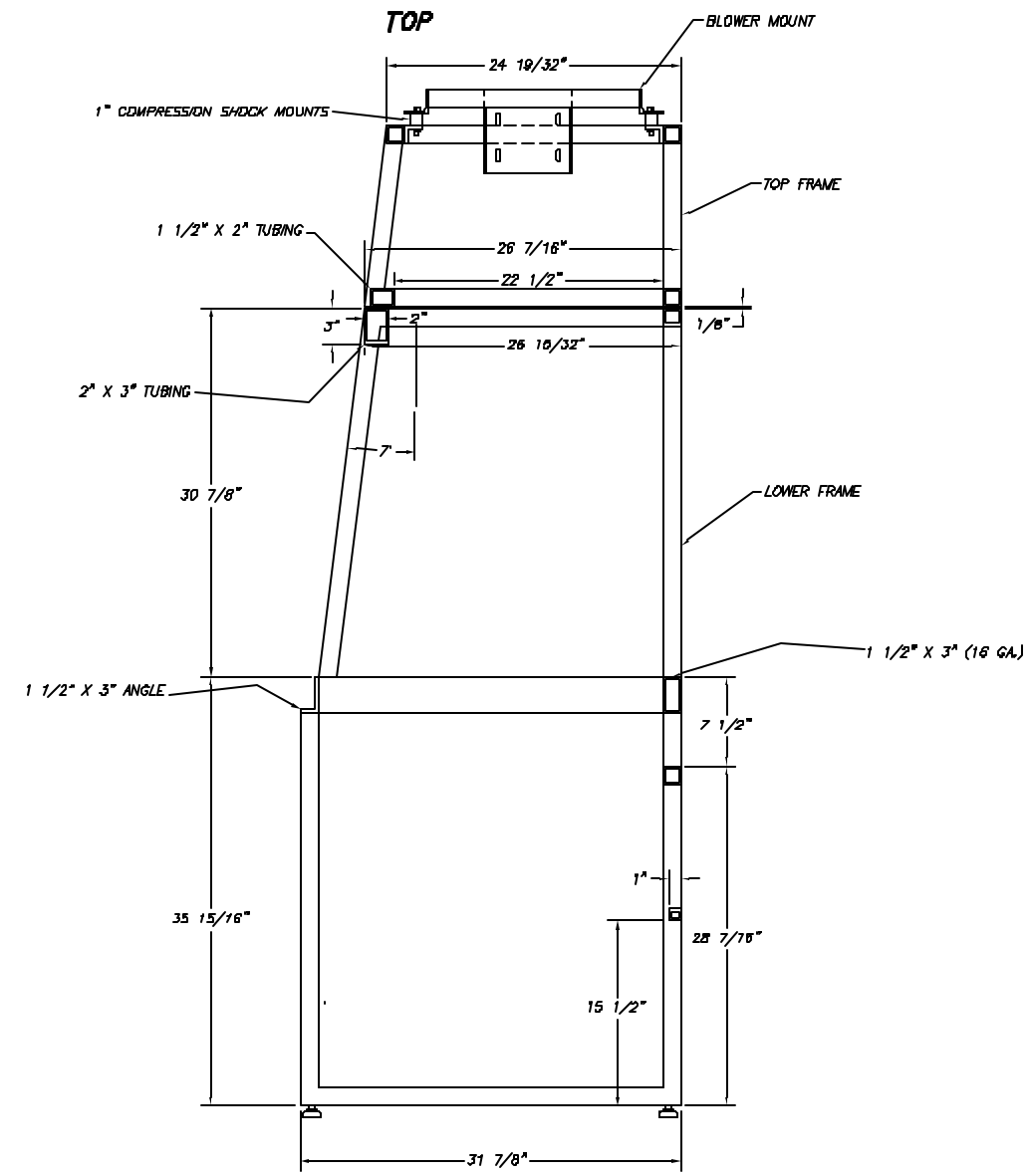

SECTION "A-A"

NOTES:

7. ALL MATERIAL 1 7/2" X 1 1/2" 16 GA. 304 S.S. UNLESS OTHERWISE SPECIFIED.

THIS DRAWING IS THE PROPERTY OF AIR CONTROL, INC. AND REPRESENTS A PROPRIETARY DESIGN OF AIR CONTROL, INC. IT IS NOT TO BE REPRODUCED OR DIVULGED TO UNAUTHORIZED PERSONS WITHOUT THE WRITTEN CONSENT OF AIR CONTROL, INC.

TOLERANCES
NON-METALLIC
FRACT. ±1/16
.XX ±1/32
METALLIC
FRACT. ±1/32
.XX ±.010
.XXX ±.005
UNLESS OTHERWISE NOTED

AIR CONTROL, INC.
237 RALEIGH ROAD HENDERSON, NC 27536

SCALE 1/8"=1"	ENGINEER APPRV.	REV. 1	DRAWN BY BDR
		DATE 10/10/02	DATE 10/8/02
NAME: MICROVOID 4F-31-SS-4FT			PAGE 1 OF 1
CUSTOMER NAVAL RESEARCH LABORATORY		JOB NO. 10216	DWG. NO. 10216-D1
CUST. PO. NO. N00173-02-P-1321			

SCHAL/ 10216

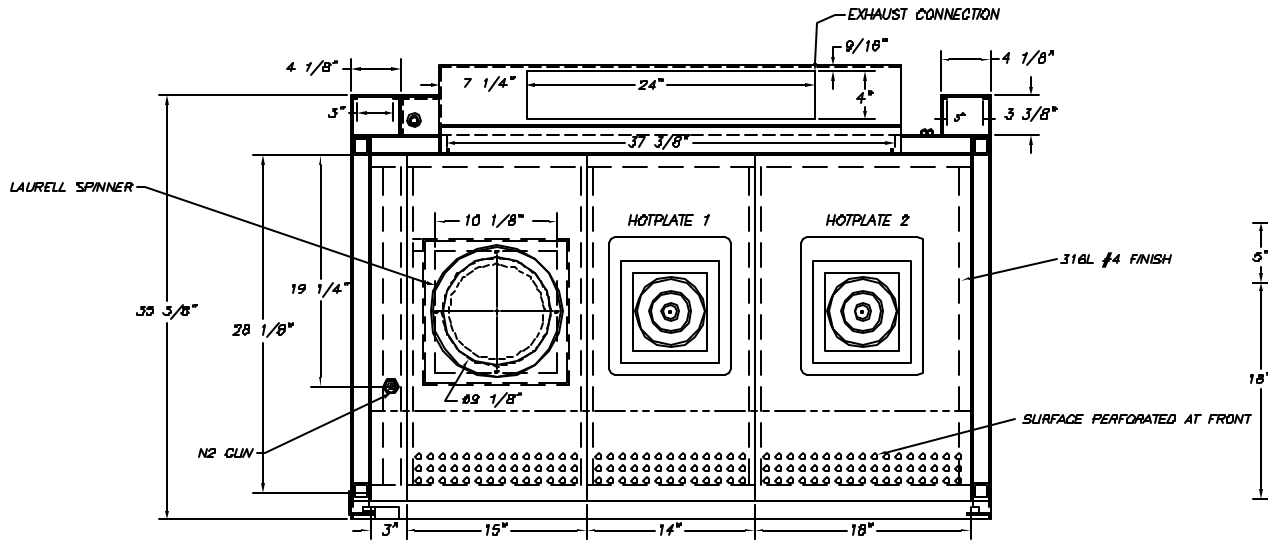

SECTION "A-A"

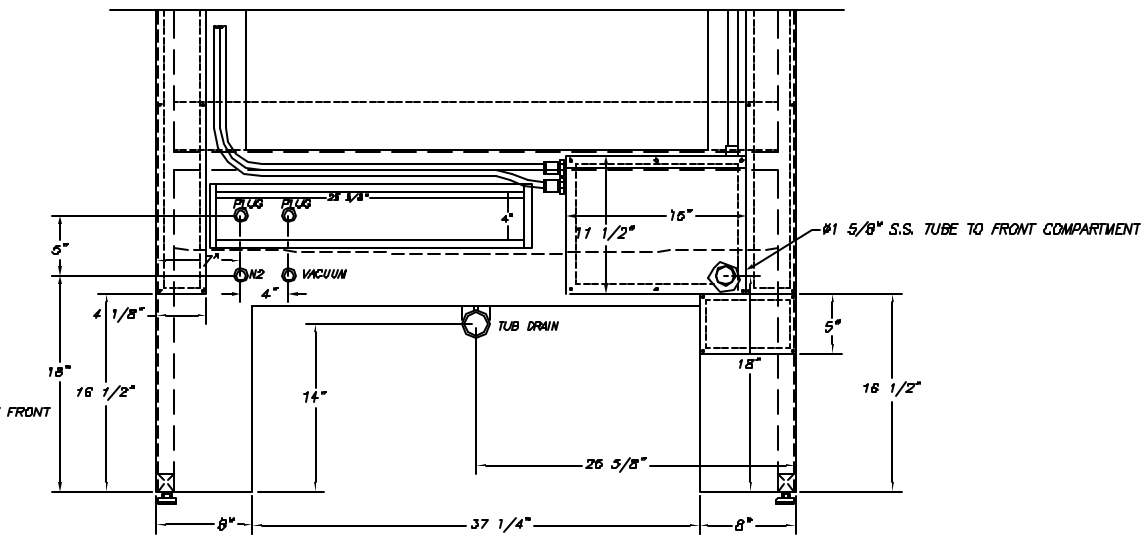

PARTIAL REAR VIEW

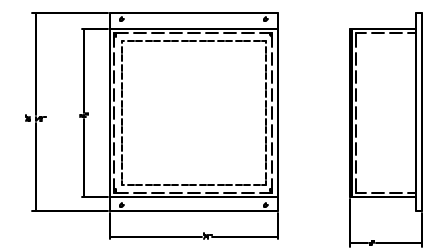

REMOTE PURGE/LOAD CENTER

REFER TO NOTE #3

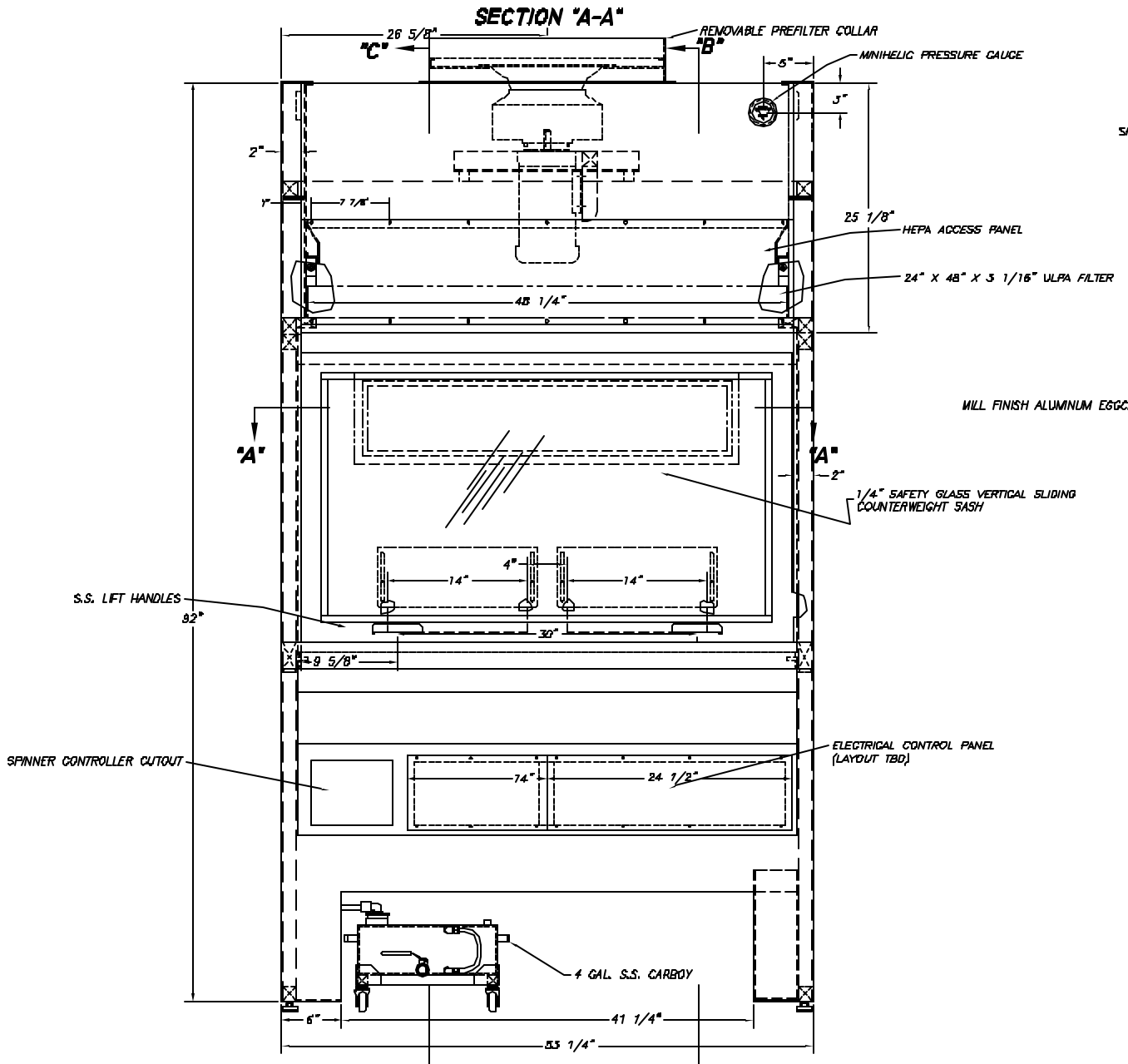

FRONT

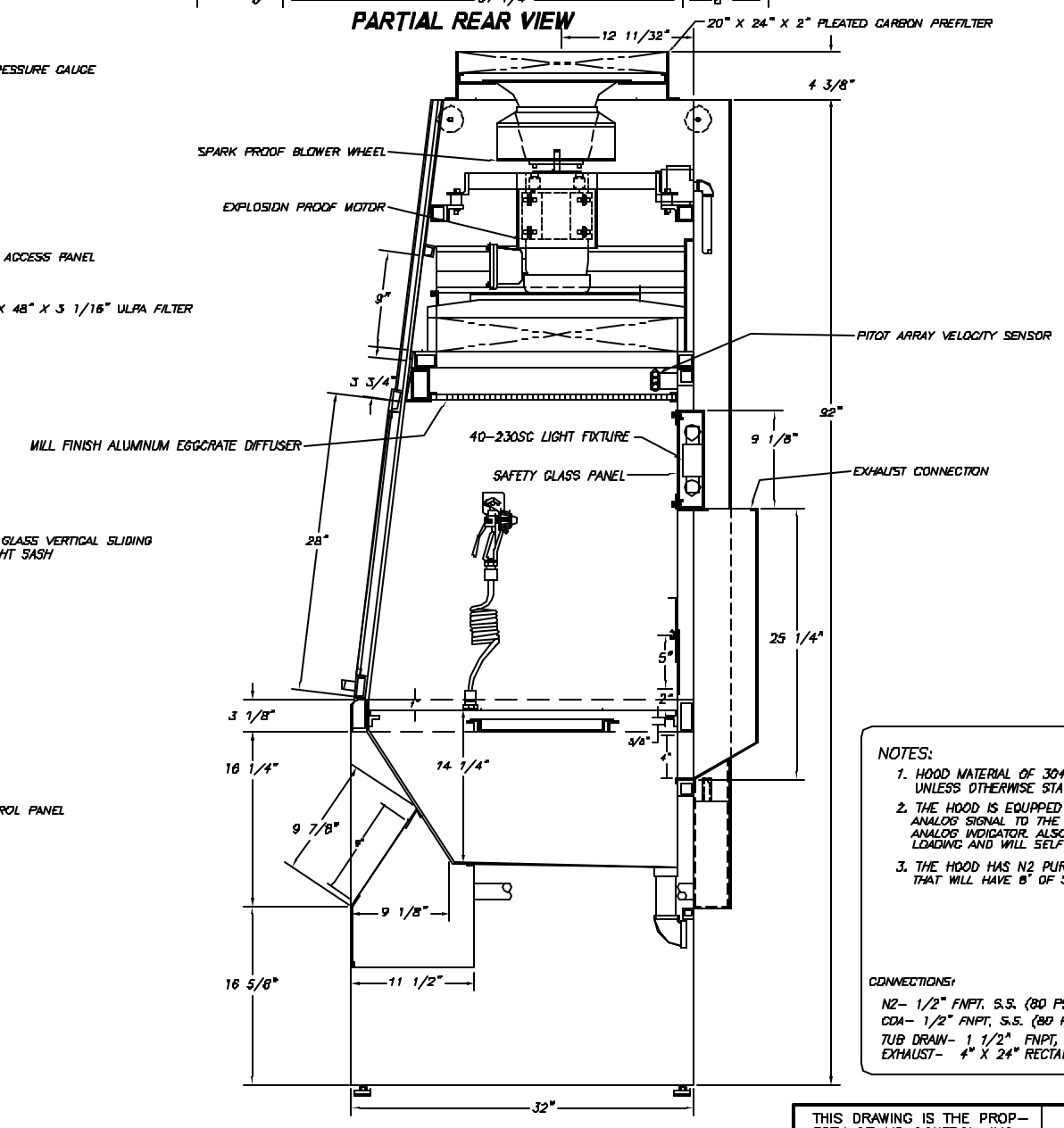

SECTION "B-B"

NOTES:

1. HOOD MATERIAL OF 304 & 316 STAINLESS STEEL TUBING AND SHEET METAL UNLESS OTHERWISE STATED.
2. THE HOOD IS EQUIPPED W/ A VARIABLE VOLUME EXHAUST SYSTEM THAT WILL GIVE AN ANALOG SIGNAL TO THE EXHAUST FAN SPEED CONTROL AND A SEPARATE SIGNAL TO AN ANALOG INDICATOR. ALSO THE LAMINAR FLOW BLOWER WILL SELF COMPENSATE FOR FILTER LOADING AND WILL SELF ADJUST FROM 90LFM TO 50 LFM DEPENDING ON SASH POSITION.
3. THE HOOD HAS N2 PURGED ELECTRICALS. THERE WILL BE A SEPARATE LOAD CENTER/PURGE THAT WILL HAVE 8" OF SEAL TIGHT CONDUIT, THAT NEEDS TO BE LOCATED IN A SAFE AREA.

CONNECTIONS:

N2- 1/2" FNPT, S.S. (80 PSI)
CDA- 1/2" FNPT, S.S. (80 PSI)
TUB DRAIN- 1 1/2" FNPT, S.S.
EXHAUST- 4" X 24" RECTANGULAR- (875 CFM @~1/4" S.P.)

DUV SPINNER (ZONE 7 WEST)

THIS DRAWING IS THE PROPERTY OF AIR CONTROL, INC. AND REPRESENTS A PROPRIETARY DESIGN OF AIR CONTROL, INC. IT IS NOT TO BE REPRODUCED OR DIVULGED TO UNAUTHORIZED PERSONS WITHOUT THE WRITTEN CONSENT OF AIR CONTROL, INC.

TOLERANCES
NON-METALLIC
FRACT. ±1/16
.XX ±1/32
METALLIC
FRACT. ±1/32
.XX ±.010
.XXX ±.005
UNLESS OTHERWISE NOTED

AIR CONTROL, INC.
237 RALEIGH ROAD HENDERSON, NC 27536

SCALE: 1/8"=1"	ENGINEER APPRV.	REV. / DATE	DRAWN BY: BDR / DATE: 10/8/02
NAME: MICROVOID 4F-31-SS-4FT			PAGE: 1 OF 2
CUSTOMER: NAVAL RESEARCH LABORATORY		JOB NO.: 10216	DWG. NO.: 10216-D1
CUST. PO. NO.: N00173-02-P-1321			

SCHAL: 10216

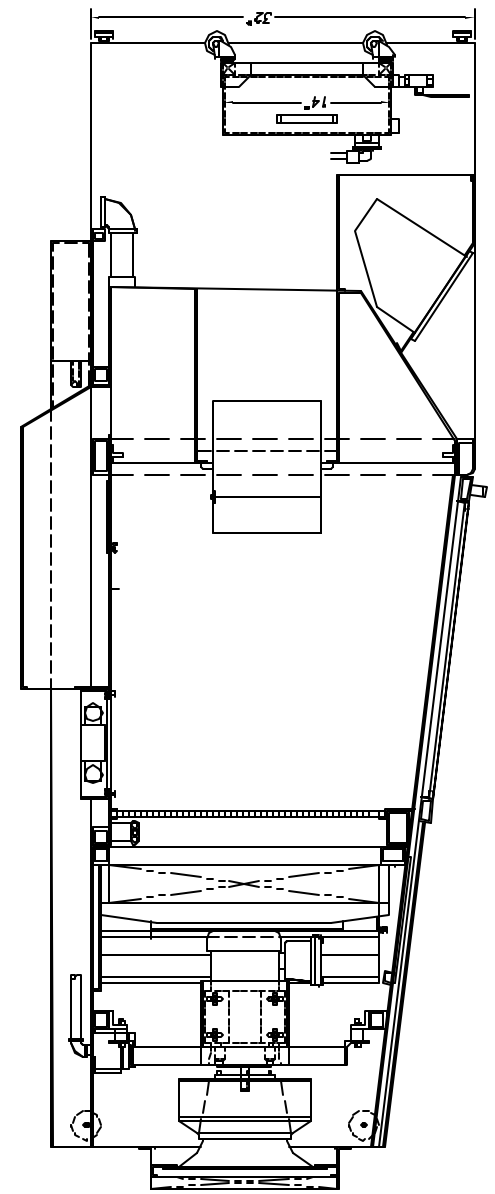

SECTION "C-C"

THIS DRAWING IS THE PROPERTY OF AIR CONTROL, INC. AND REPRESENTS A PROPRIETARY DESIGN OF AIR CONTROL, INC. IT IS NOT TO BE REPRODUCED OR DIVULGED TO UNAUTHORIZED PERSONS WITHOUT THE WRITTEN CONSENT OF AIR CONTROL, INC.

TOLERANCES
NON-MECHANICAL
FRACT. ±1/16
.XX ±1/32
NETWORK
FRACT. ±1/32
.XX ±.010
.XXX ±.005
UNLESS OTHERWISE NOTED

SCALE 1/8"=1"	ENGINEER APPR.	REV.	DRAWN BY BDR
		DATE	DATE 10/8/02
NAME MICROVOID 4F-31-SS-4FT			PAGE 2 OF 2
DESTROYER NAVAL RESEARCH LABORATORY		JOB NO. 10216	DWG. NO. 10216-D1
DEST. PO NO. N00173-02-P-1321			

AIR CONTROL, INC.
237 RALEIGH ROAD HENDERSON, NC 27536

DUV SPINNER (ZONE 7 WEST)

SCALE 10216