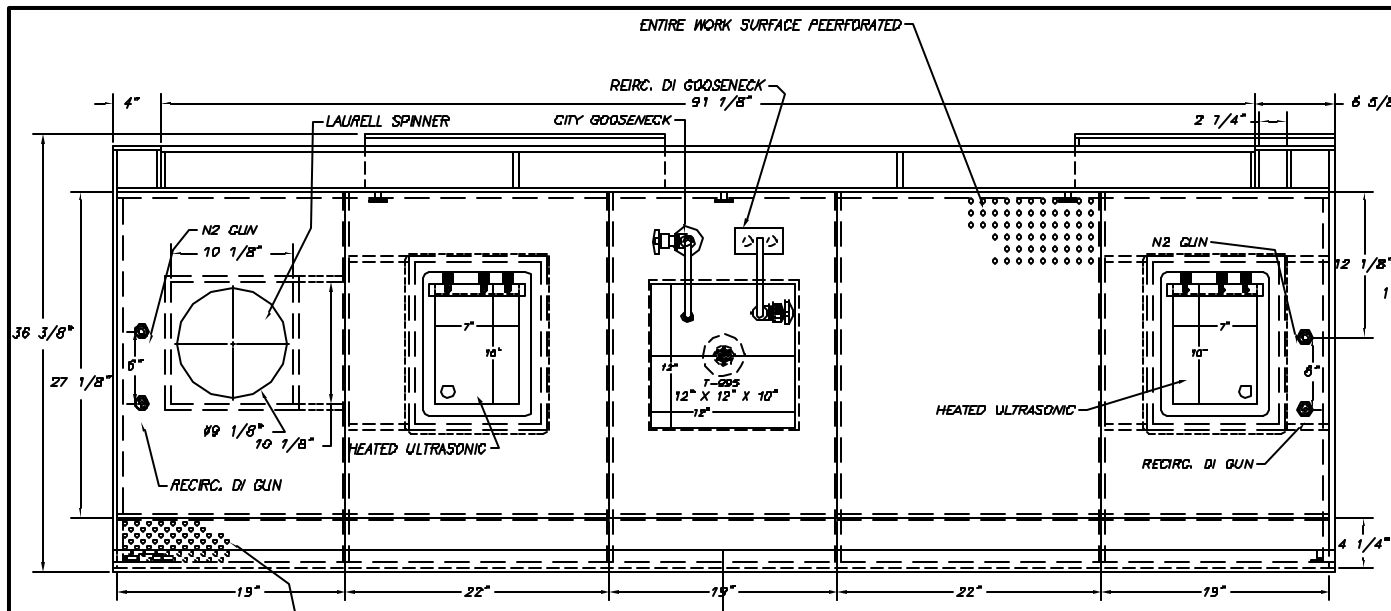

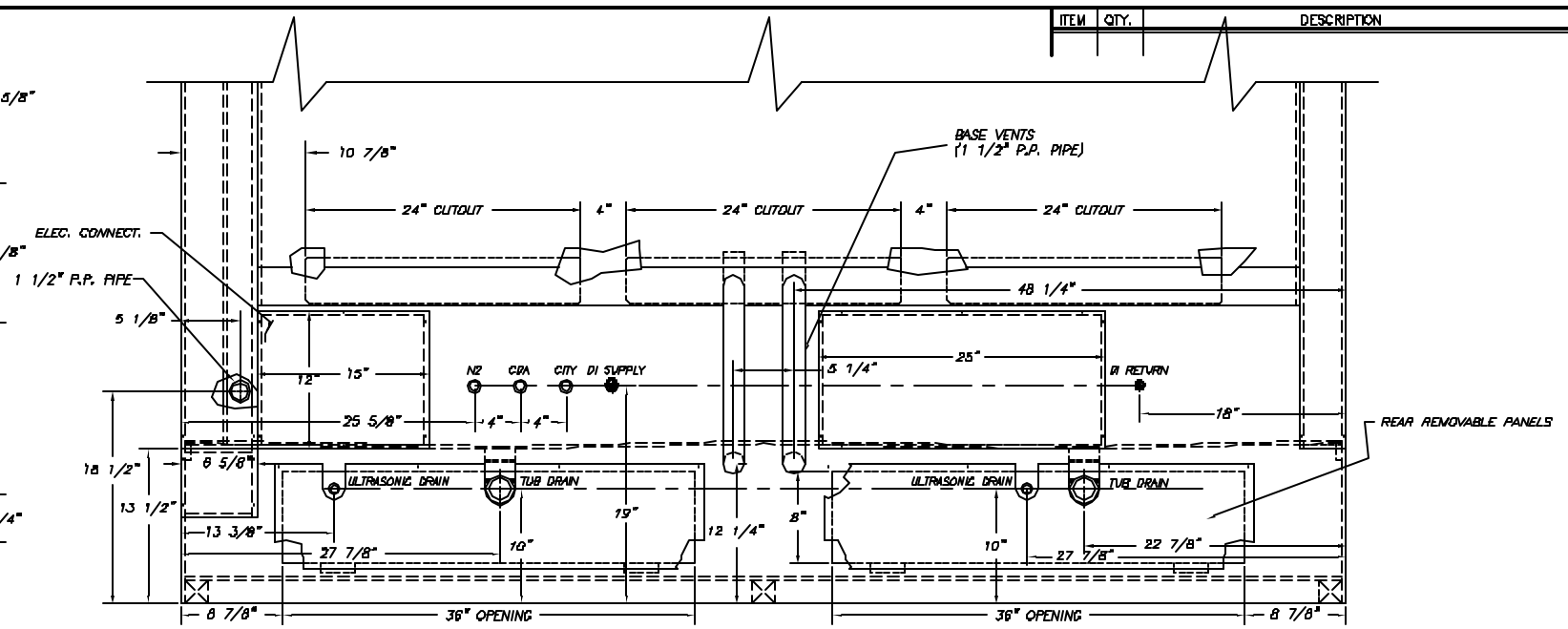

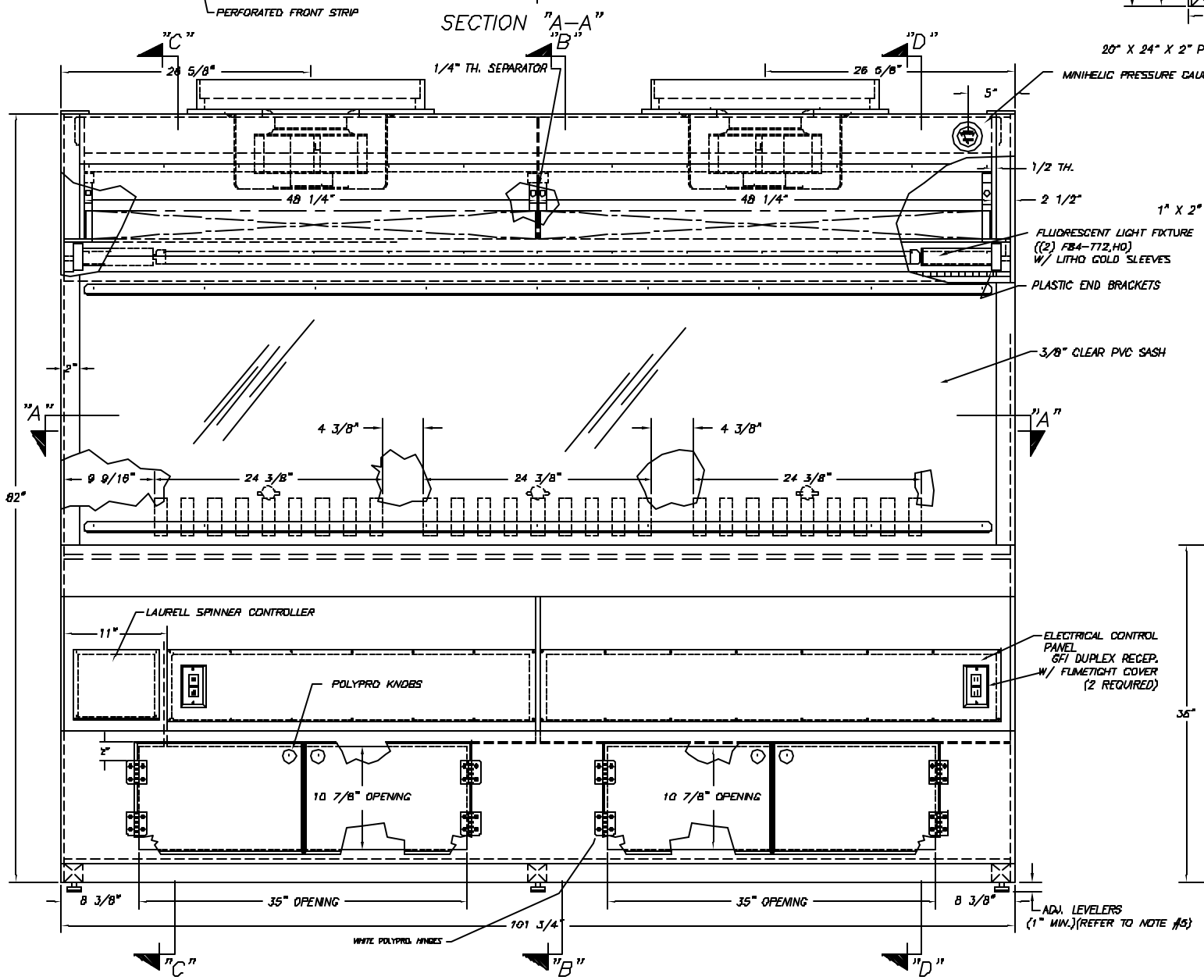

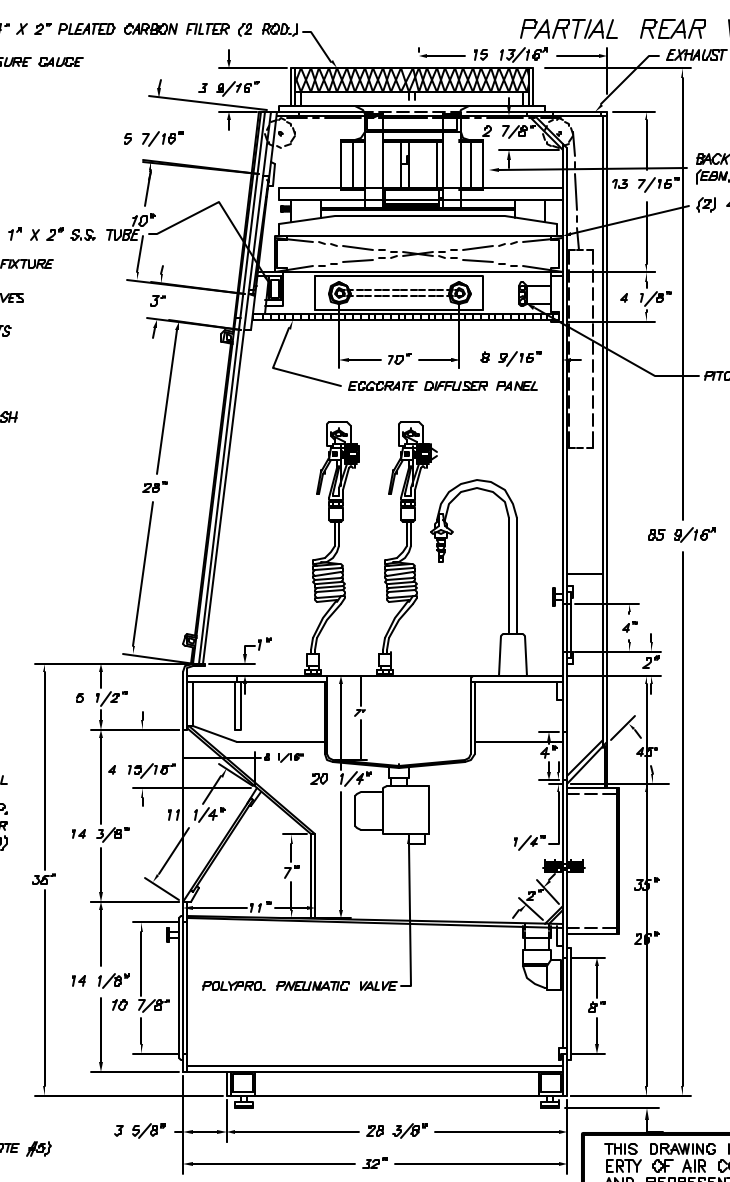

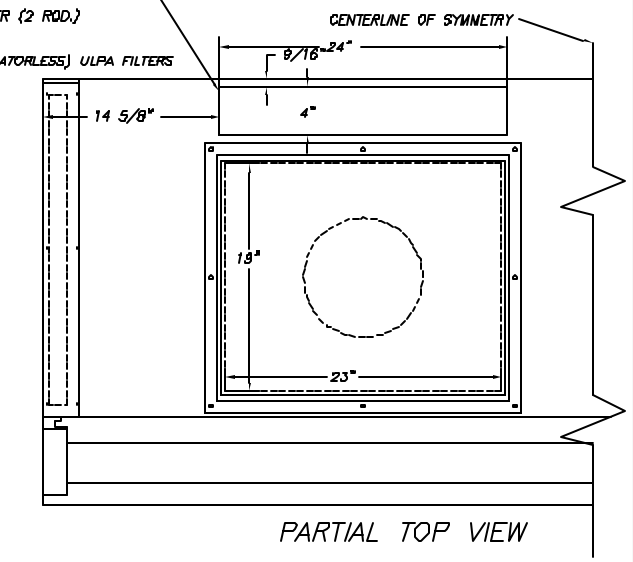

NOTES:

1. HOOD CONSTRUCTED OF WHITE STRESS RELIEVED POLYPROPYLENE UNLESS OTHERWISE NOTED.
2. THE HOOD IS EQUIPPED W/ VARIABLE VOLUME EXHAUST SYSTEM THAT WILL GIVE A SIGNAL TO THE SPEED CONTROL OF THE EXHAUST FAN AND A SEPARATE SIGNAL FOR EXHAUST MONITOR AND MAKE UP AIR. LAMINAR FLOW WILL SELF ADJUST FROM 30 LFM TO 80 LFM DEPENDING ON SASH POSITION.
3. THE ELECTRICAL CONTROL PANEL LAYOUT WILL BE DETERMINED @ ELECTRICAL DESIGN.

CONNECTIONS:

N2– 1/2" FNPT, P.P. (80 PSI)
CDA– 1/2 " TUBE, P.P. (80 PSI)
CITY WATER– 1/2" FNPT, P.P. (50 PSI MAX)
DI SUPPLY– 1/2" TEFLON FLARE (50 PSI)
DI RETURN– 1/4" TEFLON FLARE
TUB DRAIN– (2)1 1/2" NPT, P.P.
ULTRASONIC DRAIN– 3/4" MNPT, S.S.
EXHAUST– (2) 4" X 24" CUTOUTS 1728 CFM@-1/4" W.G.
ELECTRICAL– 208 VAC., 50 AMPS, 60 HTZ.

DEVELOP STATION (ZONE 8 WEST)

QTY.	DRAWING
1	10220

THIS DRAWING IS THE PROPERTY OF AIR CONTROL, INC. AND REPRESENTS A PROPRIETARY DESIGN OF AIR CONTROL, INC. IT IS NOT TO BE REPRODUCED OR DIVULGED TO UNAUTHORIZED PERSONS WITHOUT THE WRITTEN CONSENT OF AIR CONTROL, INC.

TOLERANCES
NON-METALLIC
FRACT. ±1/16
.XX ±1/32
METALLIC
FRACT. ±1/32
.XX ±.015
.XXX ±.005
UNLESS OTHERWISE NOTED

AIR CONTROL, INC.
237 RALEIGH ROAD HENDERSON, NC 27536

SCALE 1/8	ENGINEER APPROVAL	REV.	DRAWN BY BDR
		DATE	DATE 10/8/02
NAME MICROVOID 4F-31-PP-8FT.			PAGE 1 OF 2
DESTINATION NAVAL RESEARCH LABORATORY		JOB NO. 10220	DWG NO. 10220-D1
DEPT. PO NO. N00173-02-P-1390			

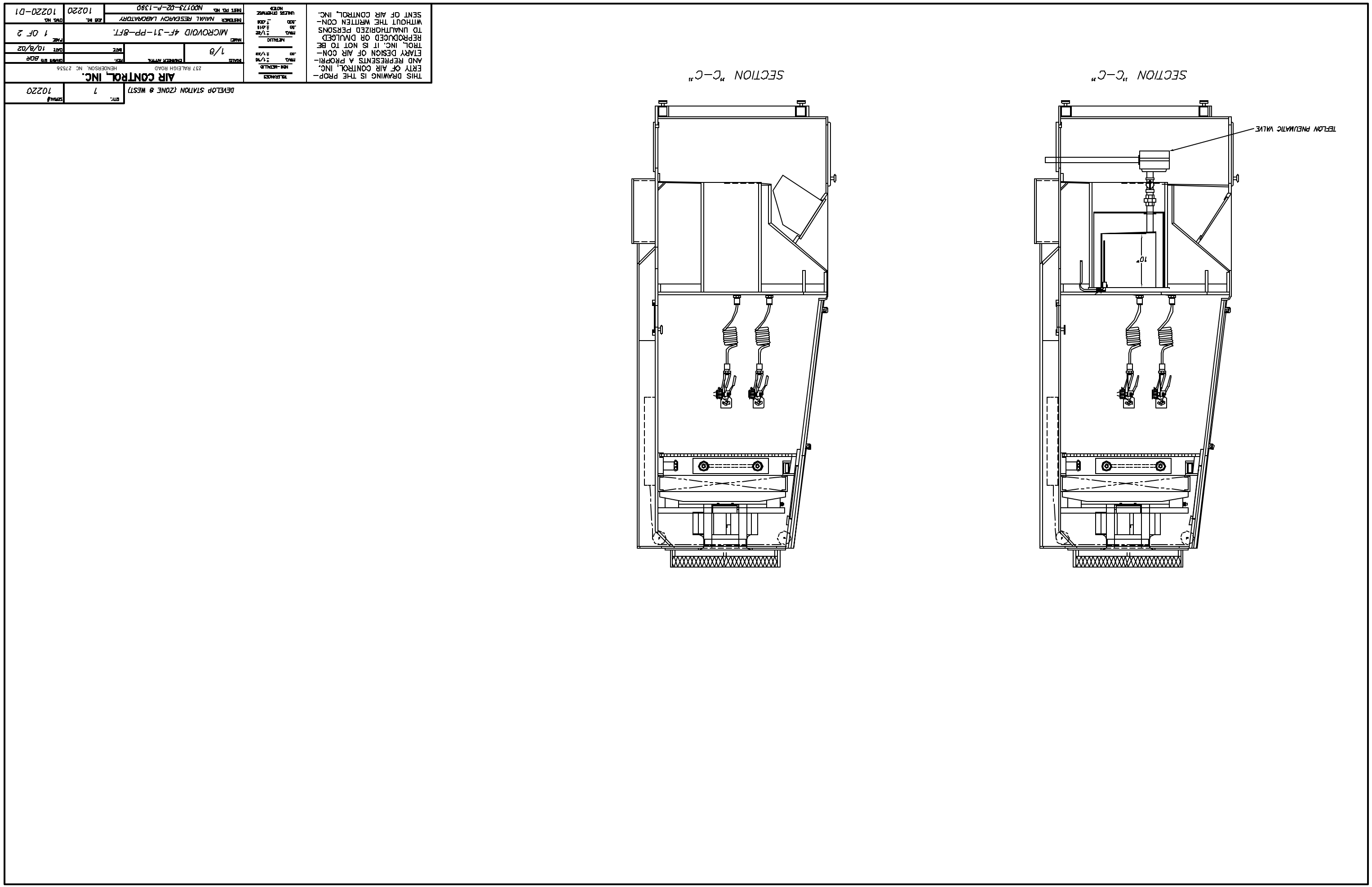
SECTION "C-C"
TEFLON PNEUMATIC VALVE
10"
SECTION "C-C"
THIS DRAWING IS THE PROPERTY OF AIR CONTROL, INC. AND REPRESENTS A PROPRIETARY DESIGN OF AIR CONTROL, INC. IT IS NOT TO BE REPRODUCED OR DIVULGED TO UNAUTHORIZED PERSONS WITHOUT THE WRITTEN CONSENT OF AIR CONTROL, INC.
TOLERANCES
NON-METALLIC
FRAC. ±1/16
.DC ±1/32
NETALLIC
FRAC. ±1/32
.DC ±.015
.XXX ±.005
UNLESS OTHERWISE NOTED
SCALE 1/8
ENGINEER APPR.
REV.
DRAWN BY BDR
DATE 10/8/02
NAME MICROVOID 4F-31-PP-8FT.
PAGE 1 OF 2
DESTOMER NAVAL RESEARCH LABORATORY
DIST. PD. NO. N00173-02-P-1390
JOB NO. 10220
DWG. NO. 10220-D1
DEVELOP STATION (ZONE 8 WEST)
QTY. 1
SERIAL# 10220
AIR CONTROL, INC.
237 RALEIGH ROAD HENDERSON, NC 27536