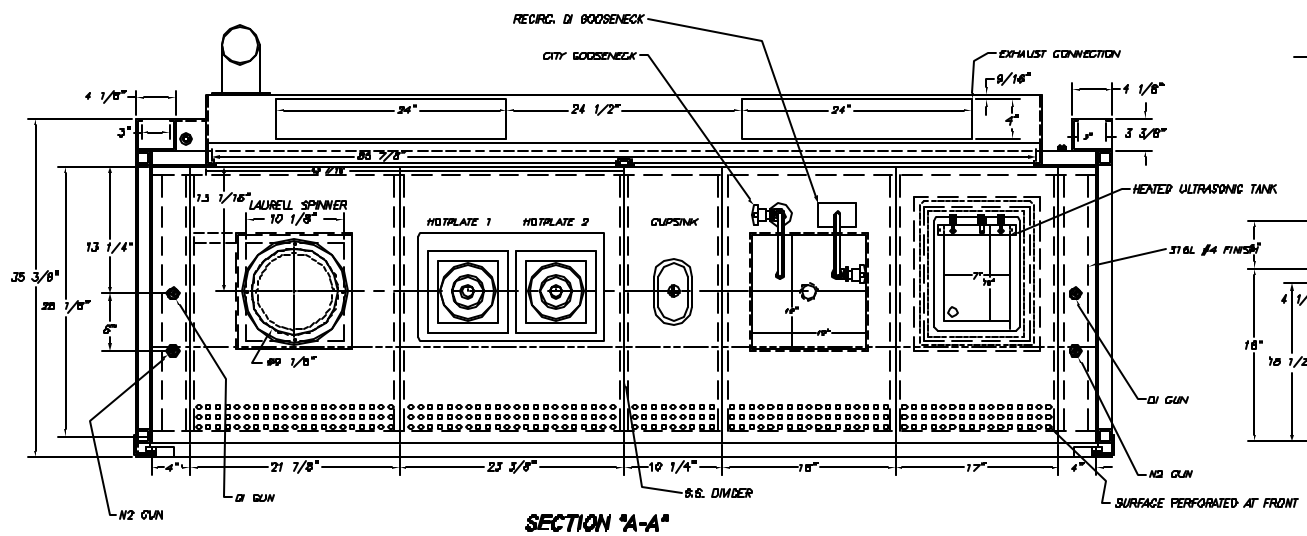

SECTION "A-A"

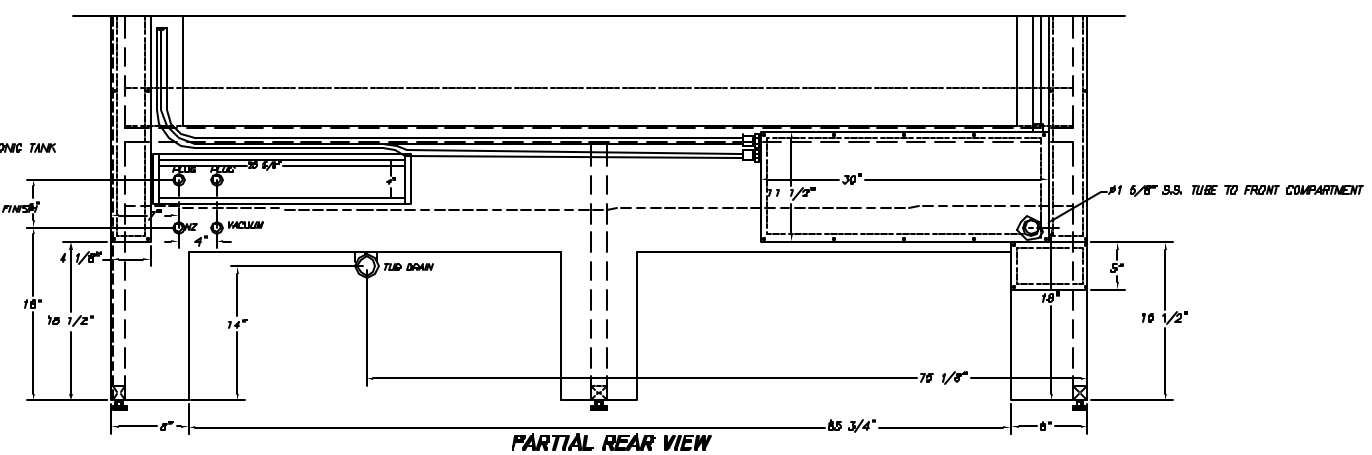

PARTIAL REAR VIEW

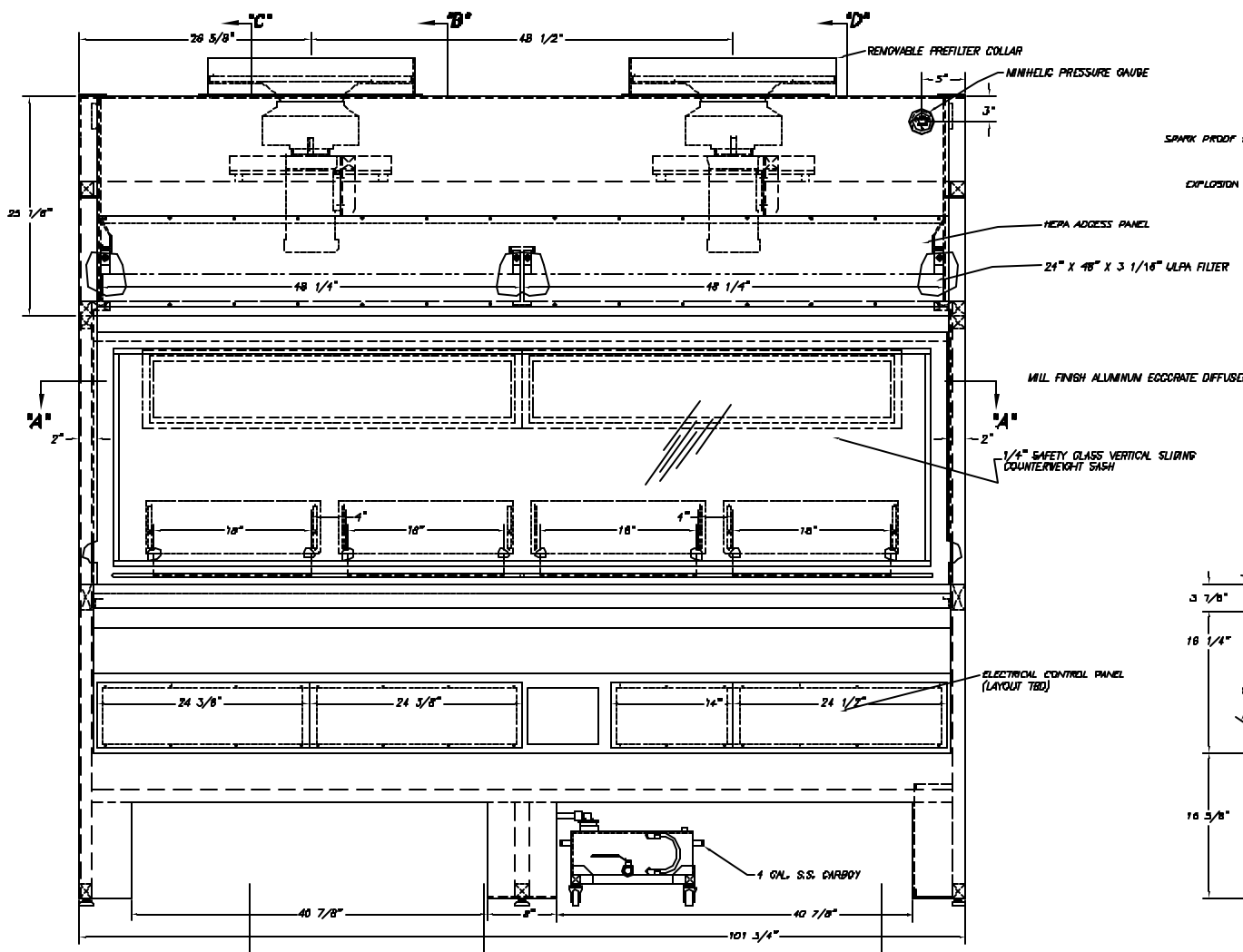

FRONT

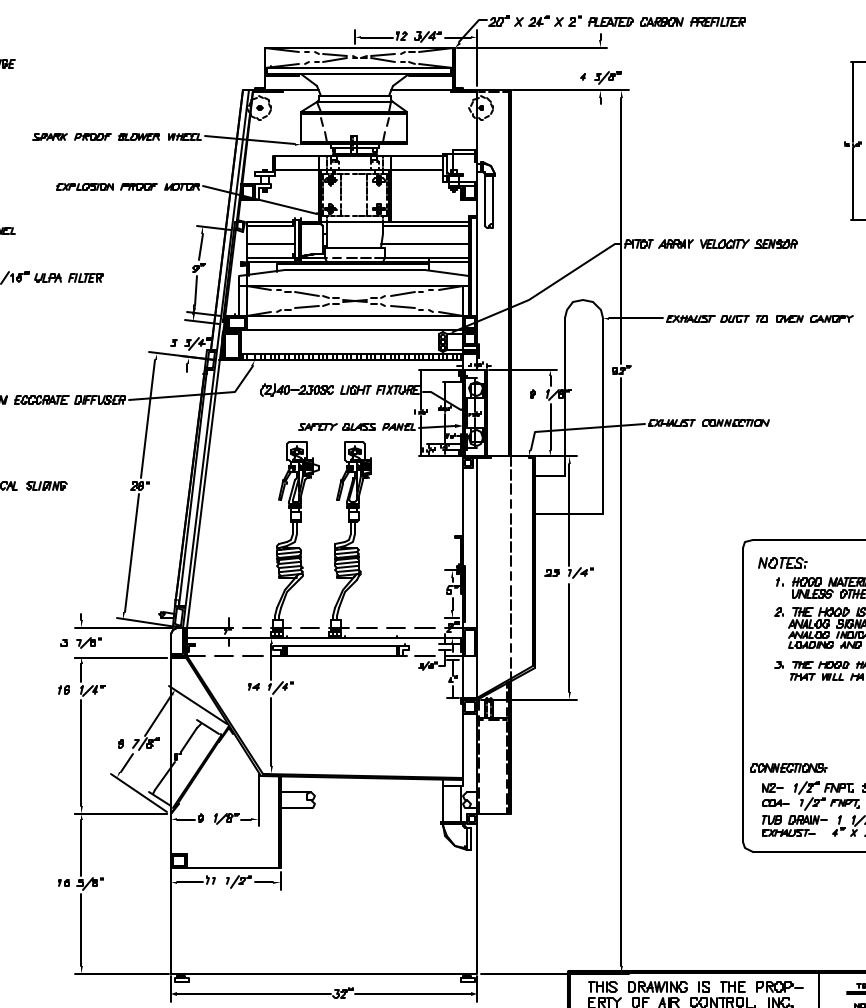

SECTION "B-B"

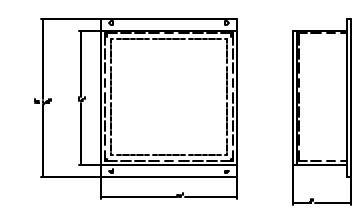

REMOTE PURGE/LOAD CENTER

REFER TO NOTE #3

NOTES:

1. HOOD MATERIAL OF 304 & 316 STAINLESS STEEL TUBING AND SHEET METAL UNLESS OTHERWISE STATED.
2. THE HOOD IS EQUIPPED W/ A VARIABLE VOLUME EXHAUST SYSTEM THAT WILL GIVE AN ANALOG SIGNAL TO THE EXHAUST FAN SPEED CONTROL AND A SEPARATE SIGNAL TO AN ANALOG INDICATOR. ALSO THE LAMINAR FLOW BLENDER WILL SELF COMPENSATE FOR FILTER LOADING AND WILL SELF ADJUST FROM 90LFM TO 30 LFM DEPENDING ON SASH POSITION.
3. THE HOOD HAS NO PURGED ELECTRICALS. THERE WILL BE A SEPARATE LOAD CENTER/PURGE THAT WILL HAVE 8' OF SEAL TIGHT CONDUIT, THAT NEEDS TO BE LOCATED IN A SAFE AREA.

CONNECTIONS:

N2- 1/2" FNPT, S.S. (80 PSI)
CDA- 1/2" FNPT, S.S. (80 PSI)
TUB DRAIN- 1 1/2" - FNPT, S.S.
EXHAUST- 4" X 24" RECTANGULAR- (873 CFM @-1/4" S.P.)

THIS DRAWING IS THE PROPERTY OF AIR CONTROL, INC. AND REPRESENTS A PROPRIETARY DESIGN OF AIR CONTROL, INC. IT IS NOT TO BE REPRODUCED OR DIVULGED TO UNAUTHORIZED PERSONS WITHOUT THE WRITTEN CONSENT OF AIR CONTROL, INC.

TOLERANCES

NON-METALLIC

FRACT.	±1/16
.XX	±1/32

METALLIC

FRACT.	±1/32
.XX	±.010
.XXX	±.005

UNLESS OTHERWISE NOTED

SOLVENT STATION (ZONE 8 WEST)

SCALE: 10226

AIR CONTROL, INC.
237 RALEIGH ROAD HENDERSON, NC 27536

SCALE: 1/8"=1"	DESIGNER INITIAL	REV.	DRAWN BY: BDR
		DATE	DATE: 11/11/02
NAME: MICROVOID 4F-31-SS-8FT			PAGE: 1 OF 2
DESIGNER: NAVAL RESEARCH LABORATORY		JOB NO.: 10226	DWG. NO.: 10226-D1
CONT. PO. NO.: N00173-02-P-1189			

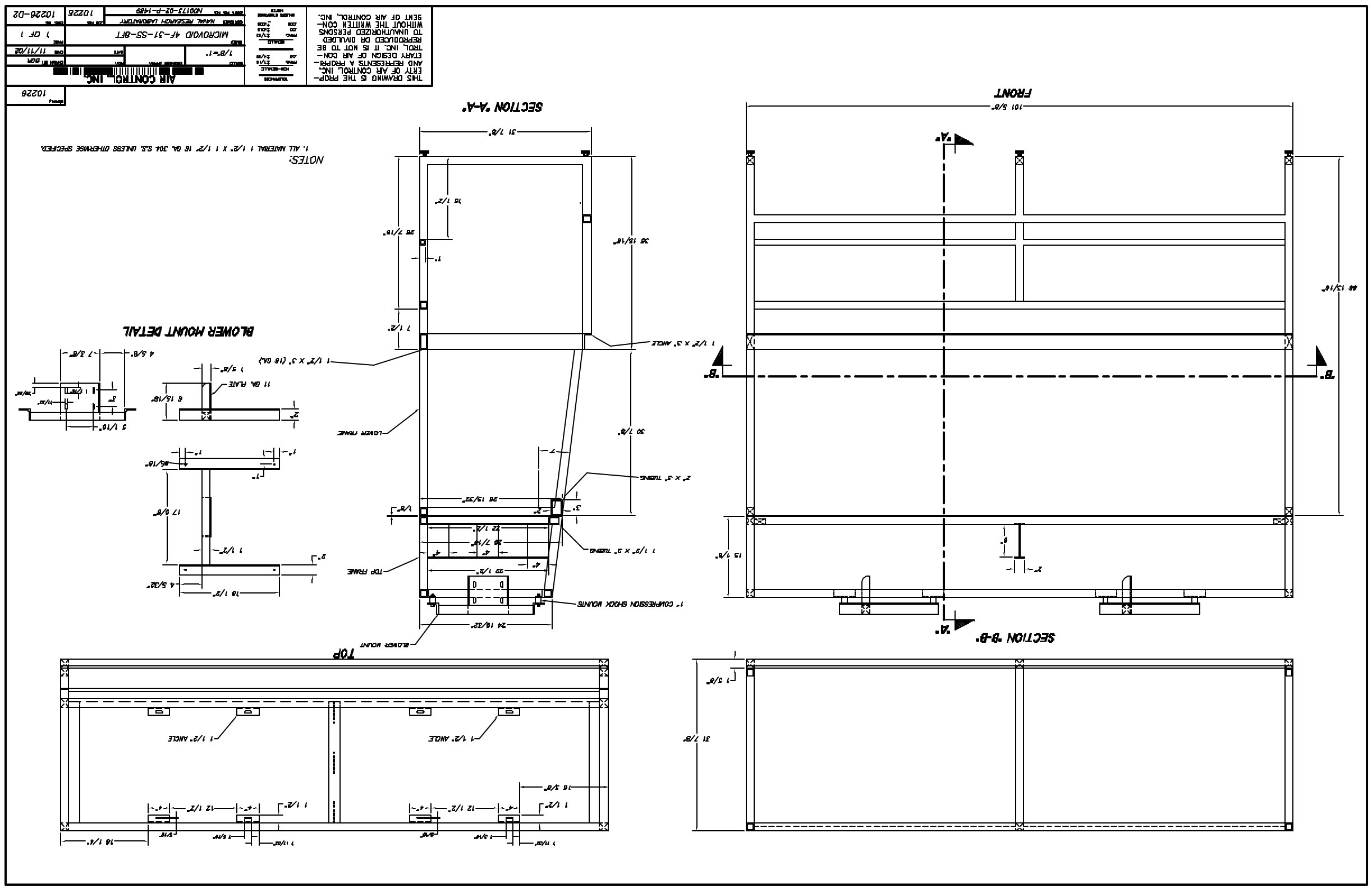

AIR CONTROL, INC.
MICROVOID 4F-31-SS-8FT
NAVAL RESEARCH LABORATORY
N00173-02-P-1489
10226-D2
10225
1 OF 1
11/11/02
1/8"=1"
THIS DRAWING IS THE PROPERTY OF AIR CONTROL, INC. AND REPRESENTS A PROPRIETARY DESIGN OF AIR CONTROL, INC. IT IS NOT TO BE REPRODUCED OR DIVULGED TO UNAUTHORIZED PERSONS WITHOUT THE WRITTEN CONSENT OF AIR CONTROL, INC.
NOTES:
1. ALL MATERIAL 1 1/2" X 1 1/2" 16 GA. 304 S.S. UNLESS OTHERWISE SPECIFIED.
SECTION "A-A"
FRONT
SECTION "B-B"
BLOWER MOUNT DETAIL
TOP
1 1/2" X 3" ANGLE
1 1/2" X 3" (16 GA.)
LOWER FRAME
2" X 3" TUBING
1 1/2" X 2" TUBING
TOP FRAME
1" COMPRESSION SHOCK MOUNTS
BLOWER MOUNT
11 GA. PLATE
1 1/2" ANGLE

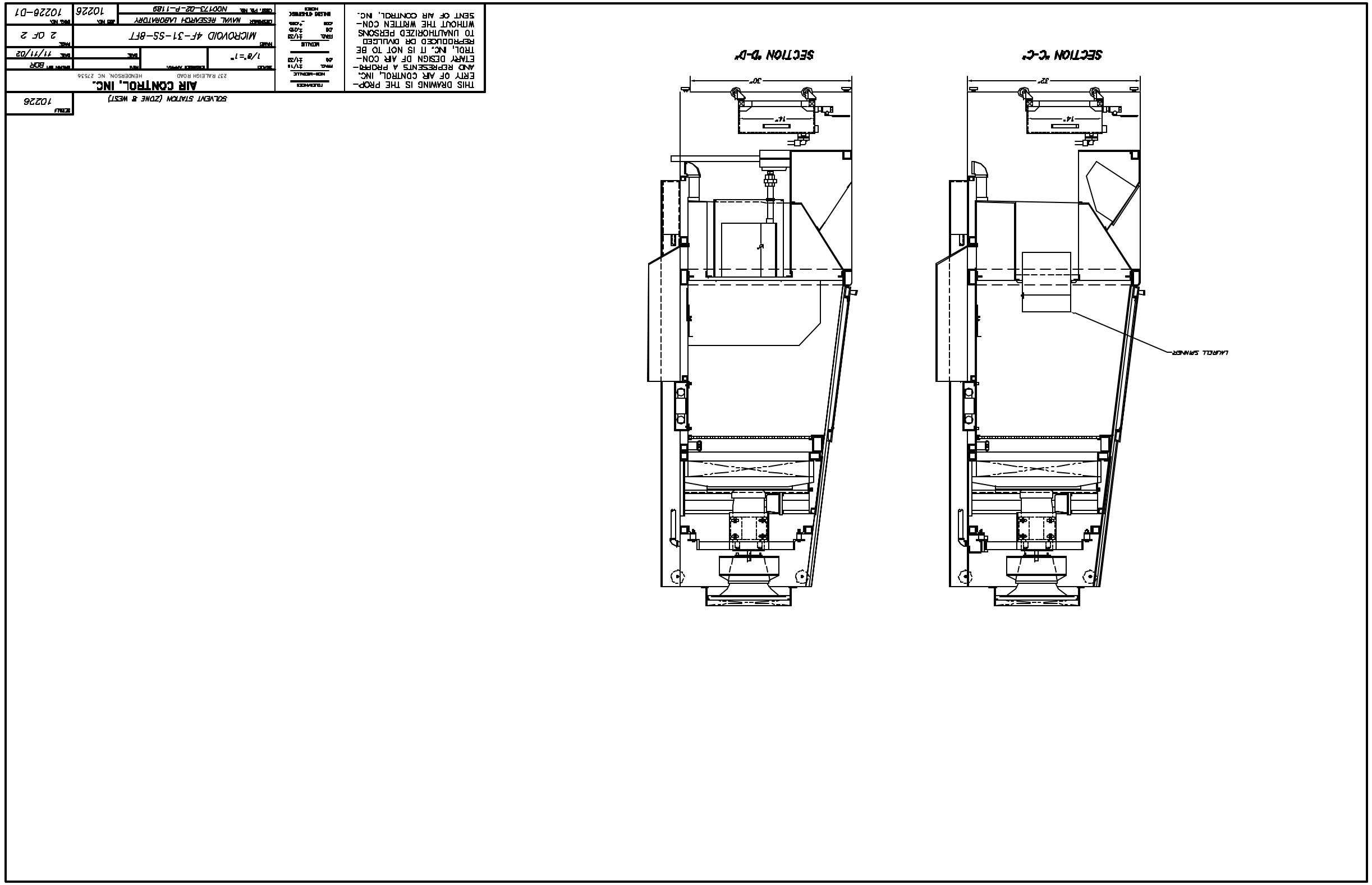
SECTION "C-C"
SECTION "D-D"
LAURELL SPINNER
32"
14"
30"
14"
THIS DRAWING IS THE PROPERTY OF AIR CONTROL, INC. AND REPRESENTS A PROPRIETARY DESIGN OF AIR CONTROL, INC. IT IS NOT TO BE REPRODUCED OR DIVULGED TO UNAUTHORIZED PERSONS WITHOUT THE WRITTEN CONSENT OF AIR CONTROL, INC.
FEATURES
NON-MEDIALE
PAVL. ±1/16
.06 ±1/32
MEDIALE
RAD. ±1/32
.06 ±.015
.008 ±.005
INLESS OTHERWISE NOTED
SOLVENT STATION (ZONE 8 WEST)
SCALE 10226
AIR CONTROL, INC.
237 RALEIGH ROAD HENDERSON, NC 27536
SCALE 1/8"=1"
DESIGNED APPROV.
DATE 11/11/02
DRAWN BY BDR
NAME MICROVOID 4F-31-SS-8FT
DESIGNER NAVAL RESEARCH LABORATORY
JOB NO. 10226
DWG. NO. 10226-D1
CONST. PRL. NO. N00173-02-P-1189
SHEET 2 OF 2

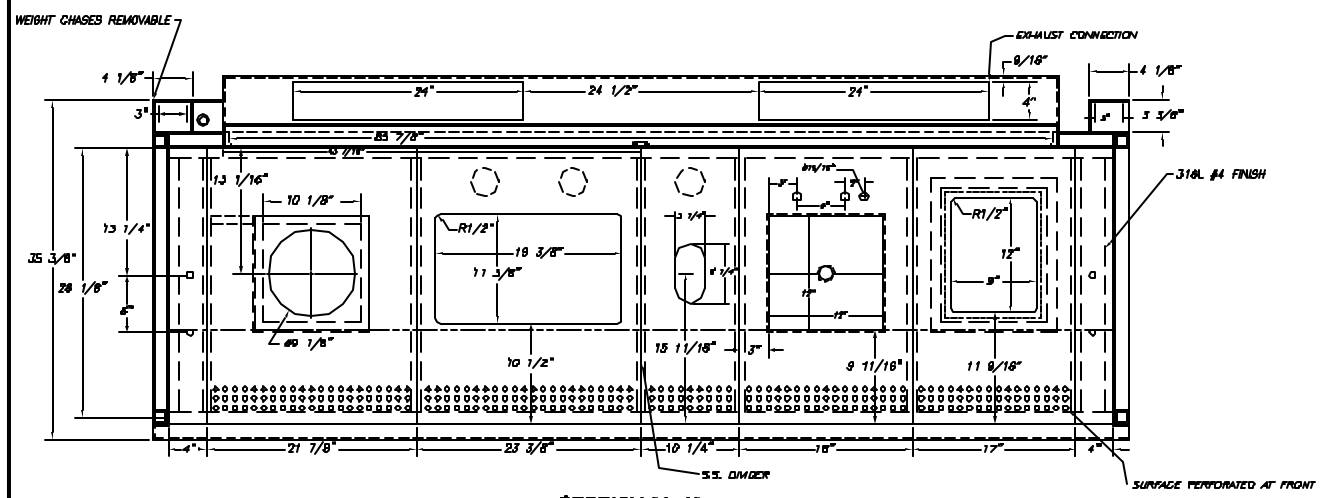

SECTION "A-A"

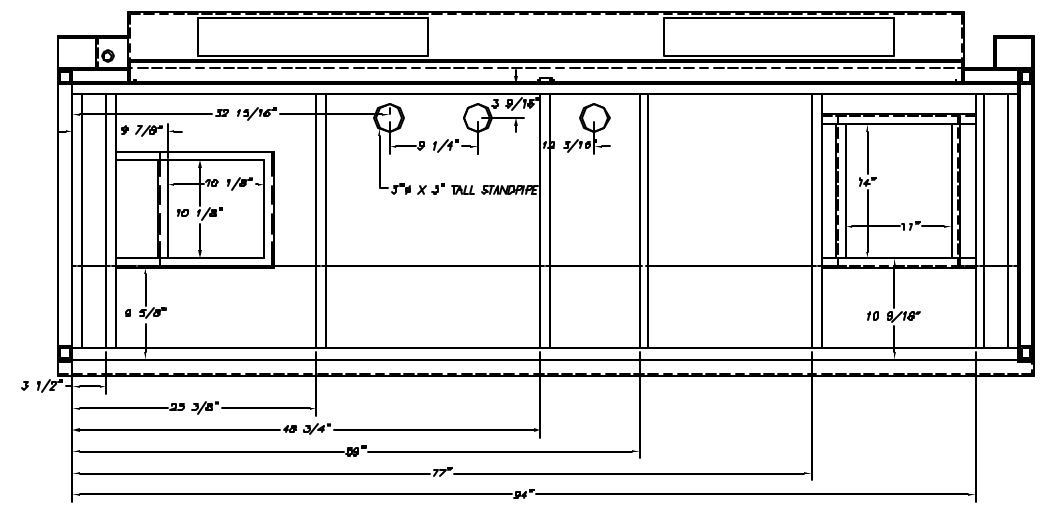

SECTION "A-A"
(BROWN WOOD SURFACE REMOVED)

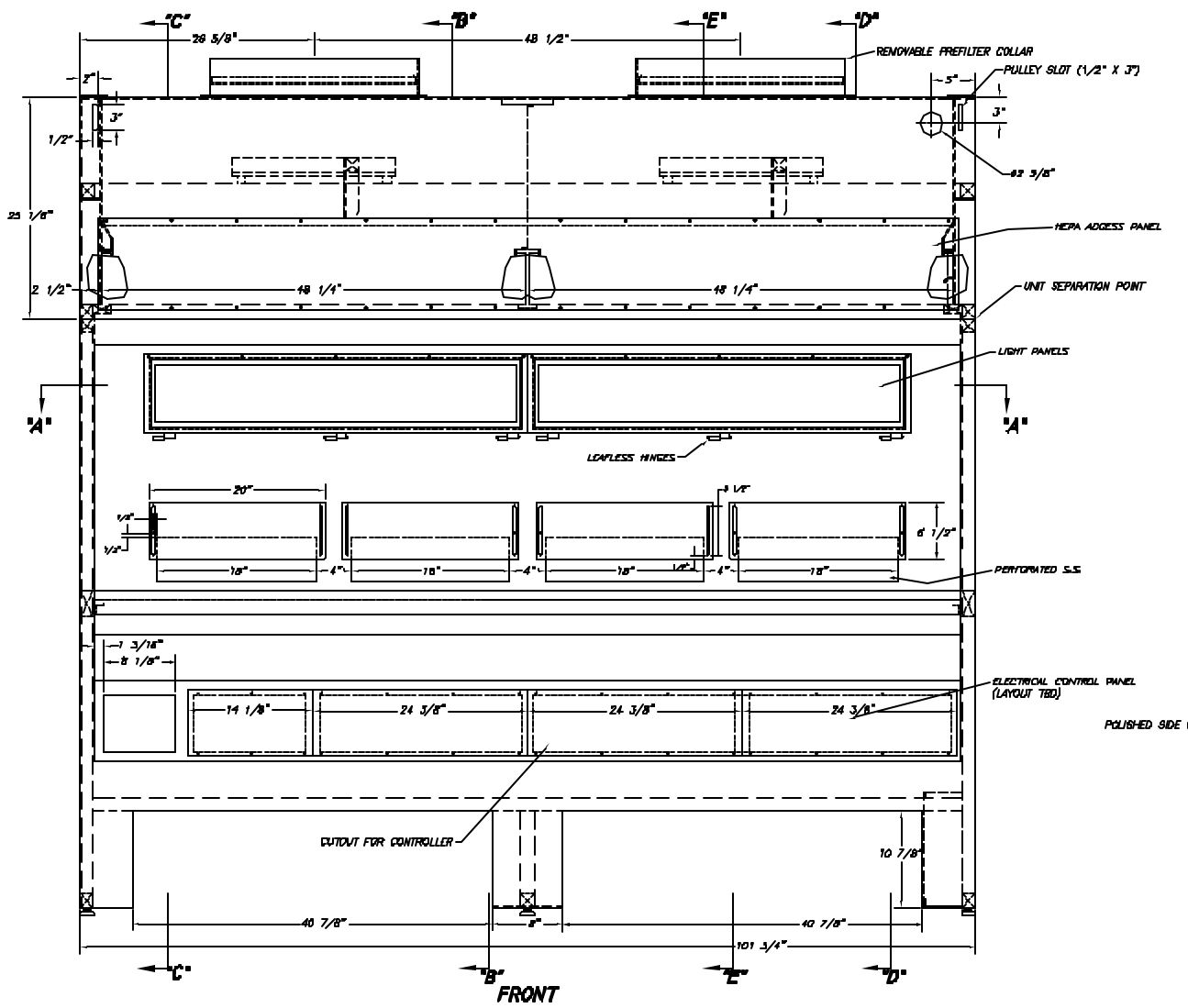

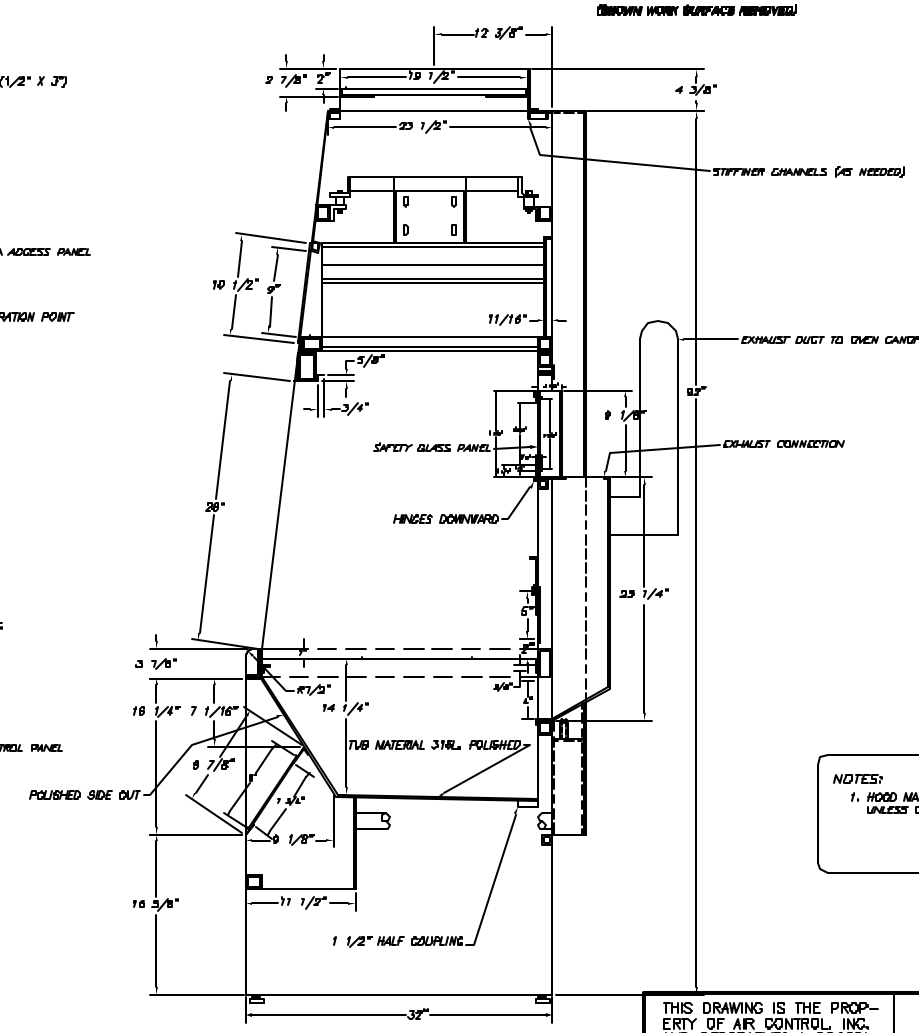

SECTION "B-B"

NOTES:
1. HOOD MATERIAL OF 304 & 316 STAINLESS STEEL TUBING AND SHEET METAL UNLESS OTHERWISE STATED.

THIS DRAWING IS THE PROPERTY OF AIR CONTROL, INC. AND REPRESENTS A PROPRIETARY DESIGN OF AIR CONTROL, INC. IT IS NOT TO BE REPRODUCED OR DIVULGED TO UNAUTHORIZED PERSONS WITHOUT THE WRITTEN CONSENT OF AIR CONTROL, INC.

TOLERANCES
NON-METALLIC
FRACT. ±1/16
.XX ±1/32
METALLIC
FRACT. ±1/32
.XX ±.010
.XXX ±.005
UNLESS OTHERWISE NOTED

SOLVENT STATION (ZONE 8 WEST)

AIR CONTROL, INC.
237 RALEIGH ROAD HENDERSON, NC 27536

SCALE 1/10 SCALE	DESIGNER NAVAL	REV	DRAWN BY BDR
		DATE	DATE 11/11/02
NAME MICROVOID 4F-31-SS-8FT			PAGE 1 OF 3
CUSTOMER NAVAL RESEARCH LABORATORY		JOB NO. 10226	DWG. NO. 10226-D1
CONT. PO. NO. N00173-02-P-1189			

SCALE 10226

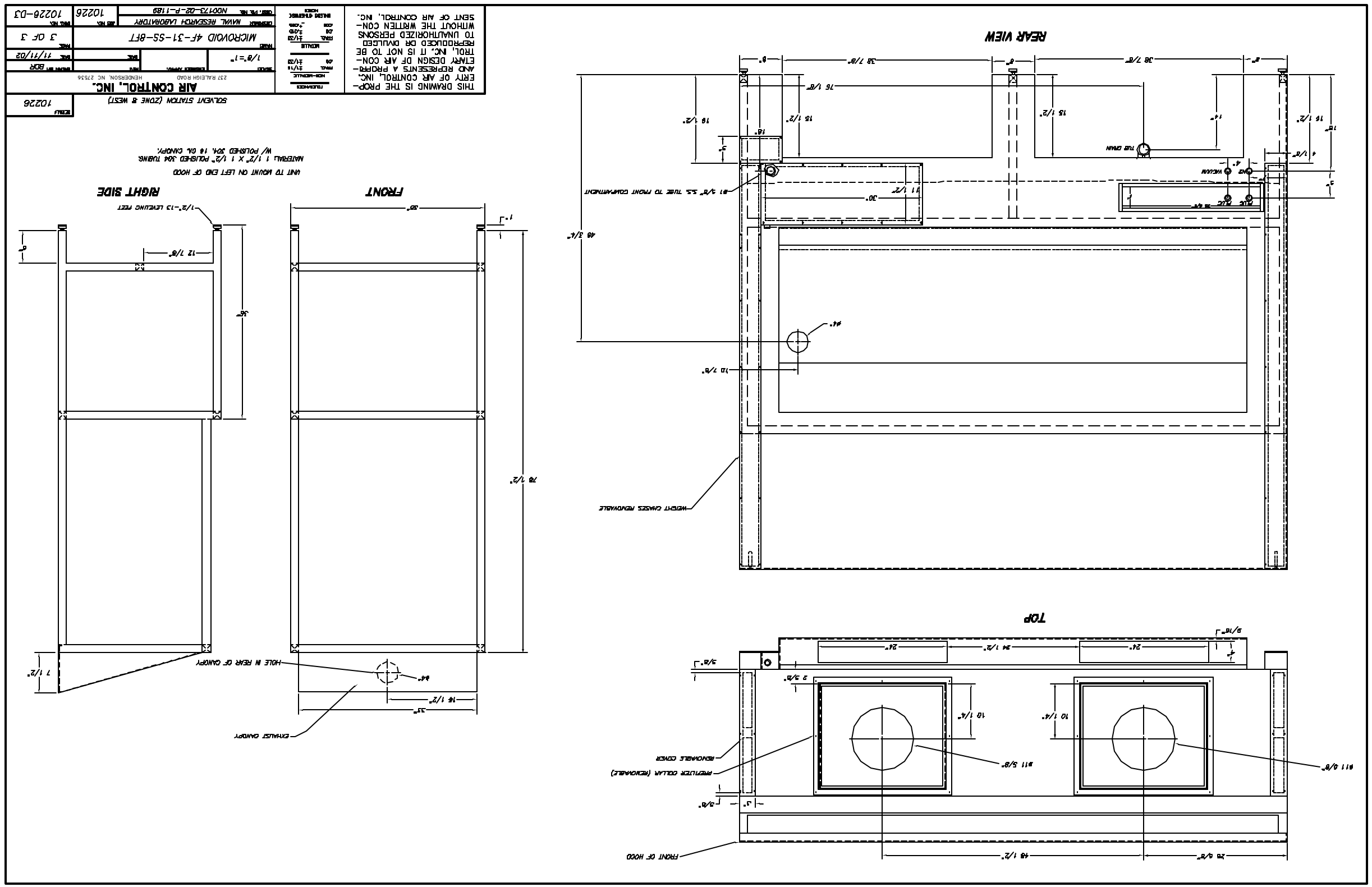

REAR VIEW
TOP
RIGHT SIDE
FRONT
SOLVENT STATION (ZONE 8 WEST)
AIR CONTROL, INC.
237 RALEIGH ROAD HENDERSON, NC 27536
MICROVOID 4F-31-SS-8FT
NAVAL RESEARCH LABORATORY
N00173-02-P-1189
10226
10226-D3
3 OF 3
11/11/02
BDR
THIS DRAWING IS THE PROPERTY OF AIR CONTROL, INC. AND REPRESENTS A PROPRIETARY DESIGN OF AIR CONTROL, INC. IT IS NOT TO BE REPRODUCED OR DIVULGED TO UNAUTHORIZED PERSONS WITHOUT THE WRITTEN CONSENT OF AIR CONTROL, INC.
UNIT TO MOUNT ON LEFT END OF HOOD
MATERIAL: 1 1/2" X 1 1/2" POLISHED 304 TUBING, W/ POLISHED 304, 16 GA. CANOPY.
1/2"-13 LEVELING FEET
HOLE IN REAR OF CANOPY
EXHAUST CANOPY
WEIGHT CHASES REMOVABLE
PREFILTER COLLAR (REMOVABLE)
REMOVABLE COVER
FRONT OF HOOD

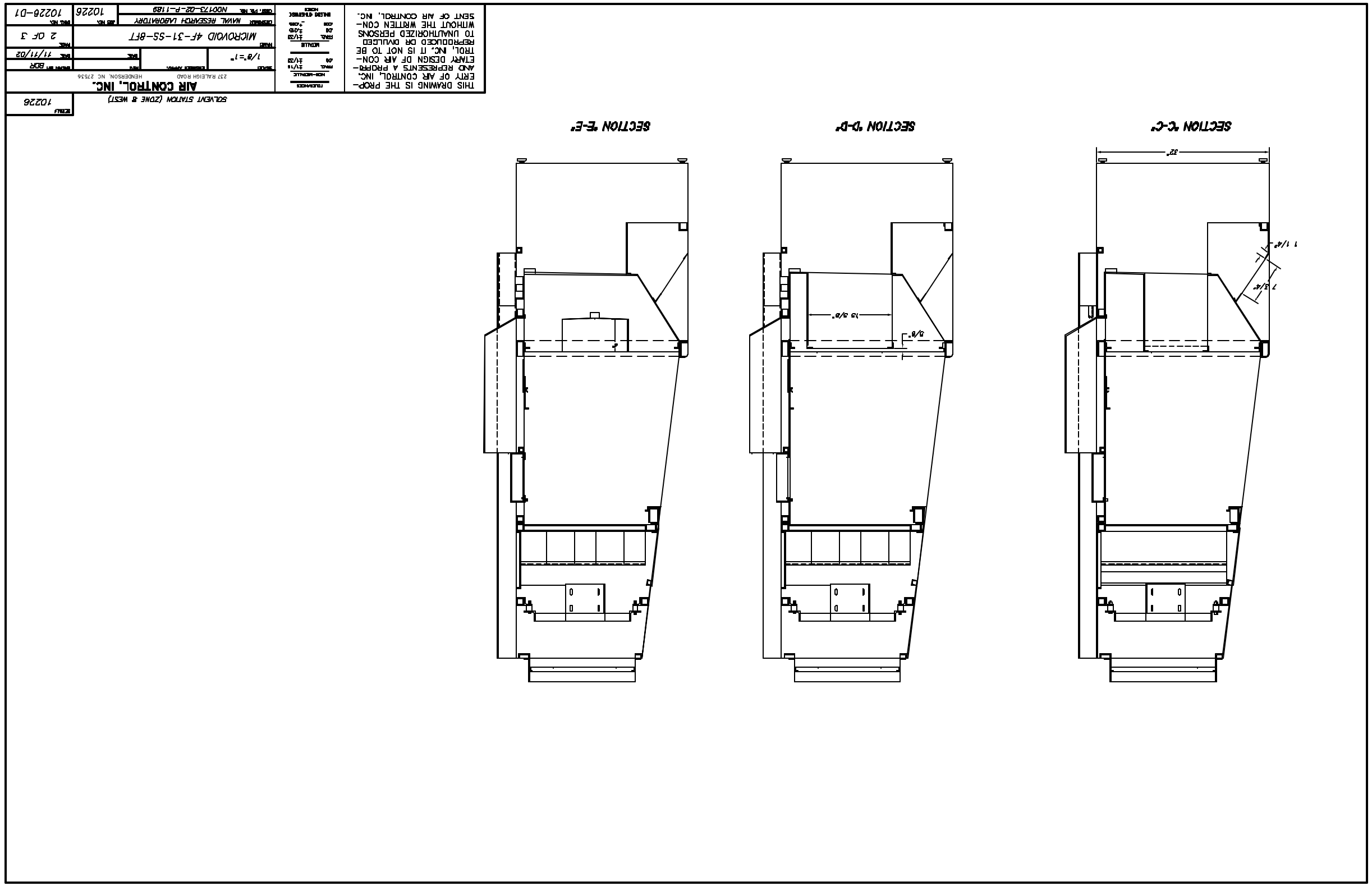
SECTION "C-C"
SECTION "D-D"
SECTION "E-E"
32"
1 1/4"
7 3/4"
15 5/8"
5/8"
SOLVENT STATION (ZONE 8 WEST)
10226
AIR CONTROL, INC.
237 RALEIGH ROAD HENDERSON, NC 27536
1/8"=1"
MICROVOID 4F-31-SS-8FT
NAVAL RESEARCH LABORATORY
N00173-02-P-1189
10226
2 OF 3
11/11/02
10226-D1
THIS DRAWING IS THE PROPERTY OF AIR CONTROL, INC. AND REPRESENTS A PROPRIETARY DESIGN OF AIR CONTROL, INC. IT IS NOT TO BE REPRODUCED OR DIVULGED TO UNAUTHORIZED PERSONS WITHOUT THE WRITTEN CONSENT OF AIR CONTROL, INC.