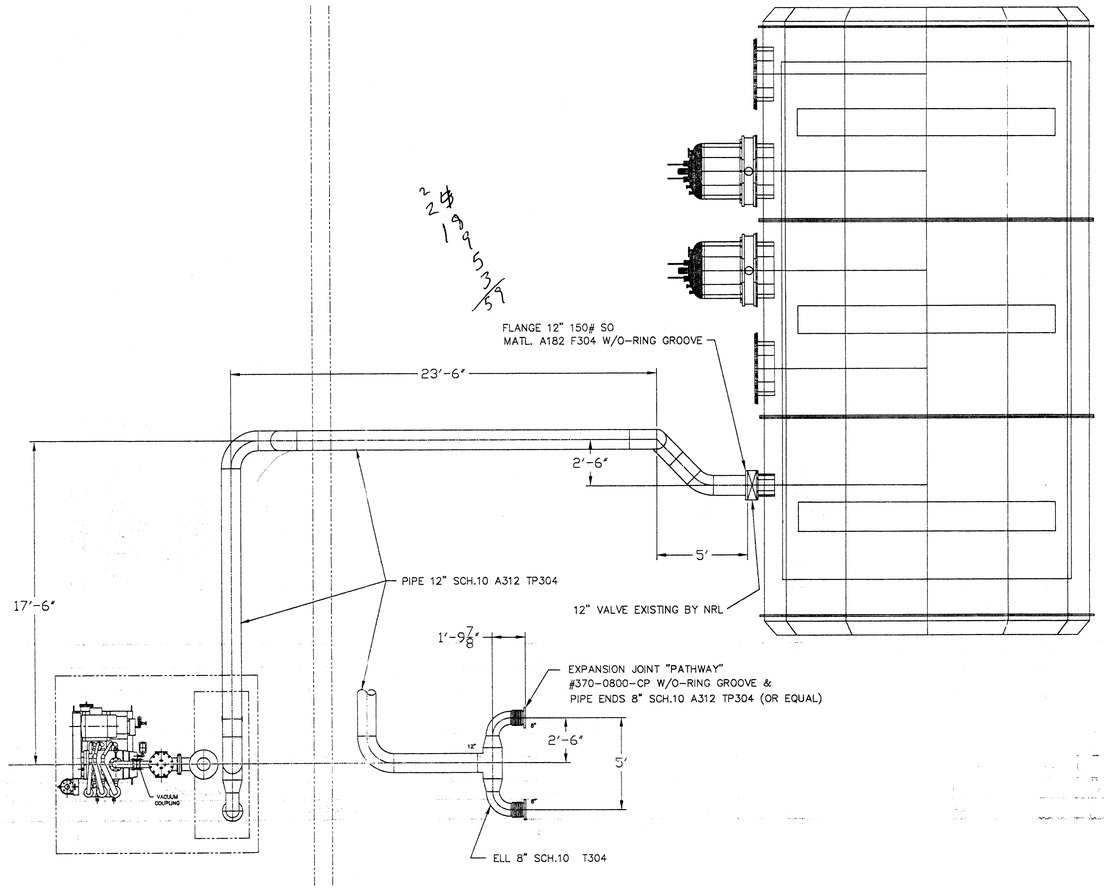

NOTES
ALL DIMENSION ARE REFERENCE ONLY, FIELD DIMENSION TO OVER RULE
ALL HARDWARE SUPPLIED BY CONTRACTOR
ALL O-RINGS (BUNA) SUPPLIED BY CONTRACTOR
USE EXISTING PIPE SUPPORTS

APR 08 1997

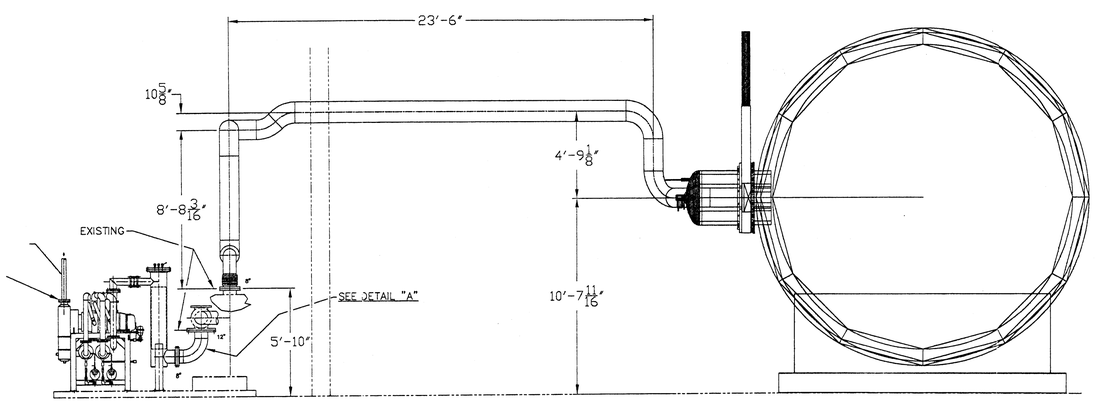

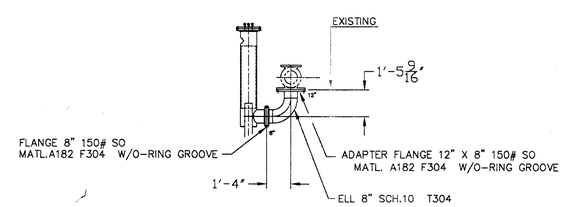

DETAIL "A"

PROPRIETARY AND CONFIDENTIAL

THIS DOCUMENT CONTAINS PROPRIETARY INFORMATION BELONGING TO PROCESS SYSTEMS INTERNATIONAL, INC. OR ITS AFFILIATED COMPANIES AND SHALL BE USED ONLY FOR THE PURPOSE FOR WHICH IT WAS SUPPLIED. IT SHALL NOT BE COPIED, REPRODUCED OR OTHERWISE USED, NOR SHALL SUCH INFORMATION BE FURNISHED IN WHOLE OR IN PART TO OTHERS EXCEPT IN ACCORDANCE WITH THE TERMS OF ANY AGREEMENT UNDER WHICH IT WAS SUPPLIED OR WITH THE PRIOR WRITTEN CONSENT OF PROCESS SYSTEMS INTERNATIONAL, INC. AND SHALL BE RETURNED UPON REQUEST.

DWG. NO.	DESCRIPTION	DWG. NO.	DESCRIPTION

REFERENCE DRAWINGS

UNLESS OTHERWISE SPECIFIED
DIMENSIONS ARE IN INCHES
TOLERANCES:
FRACTIONAL ±
ANGULARMACH ±0"-30' BEND ±2°
TWO PLACE DECIMAL ± .01
THREE PLACE DECIMAL ± .005
FINISHED SURFACE RMS
BREAK CORNERS IN: OUT:
REMOVE ALL BURRS

DO NOT SCALE THIS DRAWING

USED ON:

NEXT ASS'Y:

REV	DESCRIPTION	CHKD	DRWN	DATE	DEC#
0	ISSUE FOR BID		WEB	4-7-97	0014

ISSUE DESCRIPTION

PROCESS SYSTEMS INTERNATIONAL INC.
20 WALKUP DR. WESTBOROUGH, MASSACHUSETTS 01581 USA

VACUUM ROUGHING LINE

NAVAL RESEARCH LABRATORY
WASHINGTON D.C.

CAD FILE	SIZE	DWG. NO.	REV.
V0635101	D	V063-5-101	0

SCALE 1/4" = 1'-0" SHEET

Dec. 07, 1994 - 11:52:27