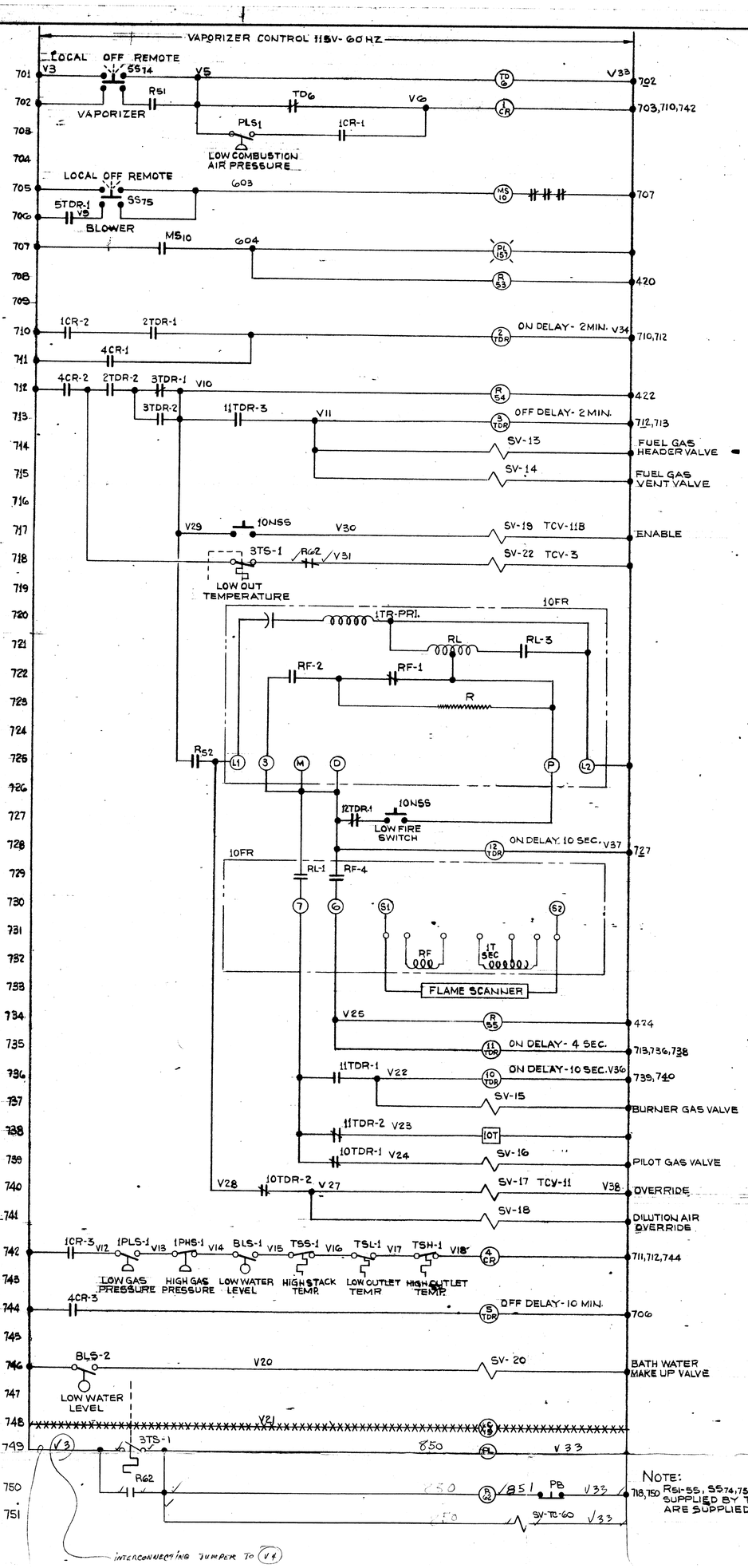

NOTE:
RS1-SS, SS74,75, TD6, MS10 AND LC18 ARE SUPPLIED BY T.E.I., ALL OTHER COMPONENTS ARE SUPPLIED BY RYAN INDUSTRIES.

JOB NUMBER 8-5-40
JOB NUMBER DESCRIPTION
QUANTITY PER JOB
B/M ISSUE DATE BY

BILL OF MATERIAL

MODEL NO.

VAPORIZER CONTROL

MATERIAL CONTROL & ACCOUNTING

IT. NO.	PC. NO.	NO. REQ'D	DESCRIPTION	INITIAL REQ'D	PROMISED & DATE	VENDOR	ISSUE REQ'S	DATE

Reference Dwg

SURFACE FINISH			
FRAC. DIM.	±		
DEC. DIM.	±		
ANGLE DIM.	±		
UNLESS OTHERWISE SPECIFIED			

REVISIONS
LTR. DATE DWN. BY APP. DESCRIPTION

DWG. ISSUE 1-15-85
DRAWN
CHK'D
APP'D