ICP/PECVD Process Gas Delivery and Abatement Equipment

This specification provides the requirements for toxic gas handling equipment to be supplied to the Naval Research Laboratory (NRL) to support clean-room processing equipment. The gases to be supplied are to support two processing systems: a chlorine-based inductively coupled plasma (ICP) etching system and a plasma-enhanced chemical vapor deposition (PECVD) system. The ICP system (Oxford Instruments Inc. Plasmalab System 100 ICP 180) will require the use of chlorine, boron trichloride, silicon tetrachloride, hydrogen, methane, sulfur hexafluoride, oxygen, argon and helium process gases. The vendor(s) are to provide the gas delivery and exhaust equipment as documented in Sections 1 – 3 below. The PECVD system (Oxford Instruments Inc. Plasmalab System 100 PECVD) will require delivery of silane, ammonia, methane, hydrogen, nitrous oxide, a mixture of tetraflouromethane and oxygen, and argon. NRL presently has Low Pressure Chemical Vapor Deposition (LPCVD) equipment that utilizes silane and ammonia and the vendor must provide interface to the present process panels with additional sensors and interface to the automatic shutdown equipment as described in Sections 4 – 5. Section 6 discusses the requirements for installation of stainless steel gas delivery lines to the PECVD system. Sections 7 - 8 describe requirements for PECVD abatement equipment and exhaust piping. Section 9 documents requirements for a self-contained breathing apparatus.

All items documented in a section will be awarded to one offeror. Offerors are requested to provide pricing for each section and also separate pricing for each option. Multiple awards may be made.

Abbreviations

3N4	"3 Nines 4"; Purity of 99.94%
3N5	"3 Nines 5"; Purity of 99.95%
5N	"5 Nines"; Purity of 99.999%
ANSI	American National Standards Institute
ASA	American Standards Association
C	Degrees centigrade
CAS	Chemical Abstracts Service
CGA	Compressed Gas Association
COR	Contracting Officer's Representative
DISS	Diameter-Index Safety System
FPM	Feet per minute
ICP	Inductively-coupled plasma
L	Liters
LPCVD	Low pressure chemical vapor deposition
NIOSH	National Institute of Occupational Safety and Health
NRL	Naval Research Laboratory
PECVD	Plasma-enhanced chemical vapor deposition
PSIA	Pounds per square inch, absolute
PSIG	Pounds per square inch, gauge
SCBA	Self contained breathing apparatus
SCCM	Standard cubic centimeters per minute
SEMI	Semiconductor Equipment and Materials International
SLPM	Standard liters per minute

Section 1. Chlorine-ICP gas delivery equipment

1.1. Process gases, Chlorine-ICP system. The gas delivery equipment must be capable of safe handling of the following gases at 100% concentration to the ICP system. Gas purity, minimum flow rate, and nominal gas bottle dimensions are given in Table 1. The vendor must supply equipment for Items 1.1.a – 1.1.e. NRL has gas bottles and regulators in place to supply Items 1.1.f – 1.1.i though pricing is requested for certain components for these gases as optional items. Gas cabinets and bottles will be placed in a utility spine adjacent to a cleanroom facility that houses the ICP system. Figures 1-3 illustrate the gas cabinet and ICP locations.

Table 1. ICP process gases.

Gas Reference	Gas	CAS No.	Minimum Purity	Min Flow Rate (SCCM)	Nom. Bottle Size (DIA x Height) (Inches)
1.1.a	Chlorine (Cl2)	7782-50-5	99.999%	200	9 x 51
1.1.b	Boron trichloride (BCl3)	10294-34-5	99.999%	100	9 x 51
1.1.c	Silicon tetrachloride (SiCl4)	10026-04-7	99.94%	100	12 x 30
1.1.d	Hydrogen (H2)	1333-74-0	99.999%	300	10 x 55
1.1.e	Methane (CH4)	74-82-8	99.999%	300	10 x 55
1.1.f	Oxygen (O2)	7782-44-7	99.995%	200	9 x 51
1.1.g	Sulfur hexaflouride (SF6)	2551-62-4	99.999%	100	9 x 51
1.1.h	Argon (Ar)	7740-37-1	99.999%	200	10 x 55
1.1.i	Helium (He)	7740-59-7	99.999%	200	10 x 55

1.2. Remote shutdown switch for ICP system toxic gases. A single remote emergency shutdown switch is to be provided that will initiate a shutdown of the gas supplies for Cl2, BCl3, and SiCl4 at the gas bottle location. The location of the switch will be in proximity to the ICP system and at a location determined by the NRL Technical Representative in consultation with the vendor.

1.3. Chlorine (Cl2) Process Gas

1.3.1 Chlorine gas bottle cabinet. One dual gas bottle safety cabinet is to be supplied to store one chlorine gas bottle and one nitrogen gas purge bottle. The cabinet must be outfitted with sensors capable of detecting a Cl2 gas leak or loss of cabinet ventilation, and performing automatic closure of gas bottles upon detection of a leak or loss of cabinet ventilation. The cabinets must allow connection of ductwork to be attached to NRL-supplied exhaust lines for continuous ventilation of the cabinet and have an integrated sprinkler head that will activate at a temperature between 150°F – 175°F.

1.3.2. Automated gas process panel (Cl2). The vendor must provide an automated process panel for control of valving and process pressure for chlorine. The process panel must be of an 'all-welded,' stainless steel design. Automated operation is to be via an electronic and/or pneumatic interface to minimize operation of process controls within the gas cabinet. The process panel must be capable of automatic shutdown upon activation of a control signal from a sensor/shutdown control unit. The process panel is to be mounted within the gas bottle cabinet and will connect to the gas cylinder and must provide pressure regulation within the range 5 – 30 PSIG at a flow of 0 - 200 SCCM. Dual ¼" male VCR output fittings are required with each having independent shutoff valve.

1.3.3. Automated purge panel (Cl2). The vendor must provide an automatic purge panel to allow remote nitrogen purge of chlorine gas lines. The purge panel is to be mounted within the gas bottle cabinet and be of an 'all-welded' design. Electronic and/or pneumatic interface is required to minimize operation of controls within the gas cabinet.

1.3.4. Toxic gas sensors and shutoff control (Cl2). The vendor must provide at least a three-channel sensor unit for detection of chlorine. One sensor is to be mounted in the gas cabinet, the second sensor is to be mounted in proximity of the ICP etching system, and a third sensor is to be mounted in the exhaust stack of the abatement system. The sensor unit/shutoff control system must provide automatic shutdown of primary gas valves for the chlorine process panel at a concentration 5 ppm or greater at any of the sensor locations or for an excess flow condition. The shutoff control unit must operate with a remote shutdown switch to be provided by the vendor at the ICP system (see Item 1.2 above.)

1.3.5. Restrictive flow orifice (Cl2). A flow restrictor attached to the gas bottle outlet is required to limit maximum output flow of Cl2 gas from the gas bottle to 3 SLPM or less at a bottle pressure of 250 psi. (This value may be changed in consultation with the vendor to insure operation over full range of bottle pressures.)

1.3.6. (Option) Gas cylinder heater blanket with temperature control (Cl2). The vendor is to provide a gas cylinder heater blanket and temperature controller to enhance the delivery pressure of Cl2. The blanket must be constructed having a protective layer so that heater elements have no direct electrical or mechanical contact to the gas bottle. Maximum blanket temperature must be self-limiting to 45 C (maximum) with ambient air temperature at 23C. The heater blanket must be capable of attachment to 9 inch DIA x 51 inch high gas cylinder. The temperature controller is to provide stable and programmable operating temperature between 15 – 40C. The heater blanket and temperature controller must operate on 115 VAC electrical power.

1.3.7. (Option) Remote readout display (Cl2). A remote readout display providing operating status of the process-purge panel must be provided at a location within the clean-room. The location of the display will be in proximity to the ICP system and determined by NRL's Technical Representative in consultation with the vendor.

1.3.8. (Option) Weighing scale (Cl2). A scale is to be provided to support the gas bottle and monitor the fill level of Cl2 within the bottle.

1.3.9. (Option) Cl gas bottle (Cl2). The vendor is to provide one bottle of Cl2 gas. The bottle must have CGA-approved fittings (CGA 660 or DISS 728) that are compatible with the process panel and flow restrictor. Gas purity is to be 5N or better; nominal cylinder volume is 44 L. The cost of the bottle is to be included (no gas bottle rental and/or demurrage) and the vendor must be capable of providing future refill services for the bottle.

1.4. Boron trichloride (BCl3) Process Gas

1.4.1. Boron trichloride (BCl3) gas bottle cabinet. One dual gas bottle safety cabinet is to be supplied to store one boron trichloride gas bottle and one nitrogen gas purge bottle. The cabinet must be outfitted with sensors capable of detecting a BCl3 gas leak or loss of cabinet ventilation, and performing automatic closure of gas bottles upon detection of a leak or loss of cabinet ventilation. The cabinets must allow connection of ductwork to be attached to NRL-supplied exhaust lines for continuous ventilation of the cabinet and have an integrated sprinkler head that will activate at a temperature between 150°F – 175°F.

1.4.2. Automated gas process panel (BCl3). The vendor must supply an automated process panel for control of valving and process pressure for boron trichloride. The process panel must be of an 'all-welded,' stainless steel design. Automated operation is to be via an electronic and/or pneumatic interface to minimize operation of process controls within the gas cabinet. The process panel must be capable of automatic shutdown upon activation of a control signal from a sensor/shutdown control unit. The process panel is to be mounted within the gas bottle cabinet and will connect to the gas cylinder and must provide pressure regulation within the range 5 – 25 PSIG at a flow of 0 - 100 SCCM. Dual ¼" male VCR output fittings are required with each having independent shutoff valve.

1.4.3. Automated purge panel (BCl3). The vendor must supply an automatic purge panel to allow remote nitrogen purge of boron trichloride gas lines. The purge panel is to be mounted within the gas bottle cabinet and of an 'all-welded' design. Electronic and/or pneumatic interface is required to minimize operation of controls within the gas cabinet.

1.4.4. Toxic gas sensors and shutoff control (BCl3). The vendor must provide at least a three-channel sensor unit for detection of BCl3. One sensor is to be mounted in the gas cabinet, the second sensor is to be mounted in proximity of the ICP etching system, and a third sensor is to be mounted in the exhaust stack of the abatement system. The sensor unit/shutoff control system must provide automatic shutdown of primary gas valves for the BCl3 process panel at a concentration 5 ppm or greater at any of the sensor locations or for an excess flow condition. The shutoff control unit must operate with a remote shutdown switch to be provided by the vendor at the ICP system (see Item 1.2 above.)

1.4.5. Restrictive flow orifice (BCl3). A flow restrictor attached to the gas bottle outlet is required to limit maximum output flow of BCl3 gas from the gas bottle to 0.7 SLPM or less at a bottle pressure of 90 psi. (This value may be changed in consultation with the vendor to insure operation over full range of bottle pressures.)

1.4.6. (Option) Gas cylinder heater blanket with temperature control (BCl3). The vendor is to supply a gas cylinder heater blanket and temperature controller to enhance the delivery pressure of BCl3. The blanket must be constructed having a protective layer so that heater elements have no direct electrical or mechanical contact to the gas bottle. Maximum blanket temperature must be self-limiting to 45 °C (maximum) with ambient air temperature at 23 °C. The heater blanket must be capable of attachment to 9 inch DIA x 51 inch high gas cylinder. The temperature controller is to provide stable and programmable operating temperature between 15 – 40 °C. The heater blanket and temperature controller must operate on 115 VAC electrical power.

1.4.7. (Option) Remote readout display (BCl3). A remote readout display providing operating status of the process-purge panel must be provided at a location within the clean-room. The location of the display will be in proximity to the ICP system and determined by NRL's Technical Representative in consultation with the vendor.

1.4.8. (Option) Weighing scale (BCl3). A scale is to be provided to support the gas bottle and monitor the fill level of BCl3 within the bottle.

1.4.9. (Option) BCl3 gas bottle (BCl3). The vendor is to provide one bottle of BCl3 gas. The bottle must have CGA-approved fittings (CGA 660 or DISS 634) that are compatible with the process panel and flow restrictor. Gas purity is to be 5N or better; nominal cylinder volume is 44 L. The cost of the bottle is to be included (no gas bottle rental and/or demurrage) and the vendor must be capable of providing future refill services for the bottle.

1.5. Silicon tetrachloride (SiCl4) Process Gas

1.5.1. Silicon tetrachloride (SiCl4) gas bottle cabinet. One dual gas bottle safety cabinet is to be supplied to store one silicon tetrachloride gas bottle and one nitrogen gas purge bottle. The cabinet must be outfitted with sensors capable of detecting a SiCl4 gas leak or loss of cabinet ventilation, and performing automatic closure of gas bottles upon detection of a leak or loss of cabinet ventilation. The cabinets must allow connection of ductwork to be attached to NRL-supplied exhaust lines for continuous ventilation of the cabinet and have an integrated sprinkler head that will activate at a temperature between 150°F – 175°F.

1.5.2. Automated gas process panel (SiCl4). The vendor must supply an automated process panel for control of valving and process pressure for silicon tetrachloride. The process panel must be of an ‘all-welded,’ stainless steel design. Automated operation is to be via an electronic and/or pneumatic interface to minimize operation of process controls within the gas cabinet. The process panel must be capable of automatic shutdown upon activation of a control signal from a sensor/shutdown control unit. The process panel is to be mounted within the gas bottle cabinet and will connect to the gas cylinder and must provide pressure regulation within the range 2 – 20 PSIA at a flow of 0 - 100 SCCM.

1.5.3. Automated purge panel (SiCl4). The vendor must supply an automatic purge panel to allow remote nitrogen purge of silicon tetrachloride gas lines. The purge panel is to be mounted within the gas bottle cabinet and of an ‘all-welded’ design. Electronic and/or pneumatic interface is required to minimize operation of controls within the gas cabinet.

1.5.4. Toxic gas sensors and shutoff control (SiCl4). The vendor must supply at least a three-channel sensor unit for detection of SiCl4. One sensor is to be mounted in the gas cabinet, the second sensor is to be mounted in proximity of the ICP etching system, and a third sensor is to be mounted in the exhaust stack of the abatement system. The sensor unit/shutoff control system must provide automatic shutdown of primary gas valves for the SiCl4 process panel at a concentration 5 ppm or greater at any of the sensor locations or for an excess flow condition. The shutoff control unit must operate with a remote shutdown switch to be provided by the vendor at the ICP system (see Item 1.2 above.)

1.5.5. (Option) Gas cylinder heater blanket with temperature control (SiCl4). The vendor is to supply a gas cylinder heater blanket and temperature controller to enhance the delivery pressure of SiCl4. The blanket must be constructed having a protective layer so that heater elements have no direct electrical or mechanical contact to the gas bottle. Maximum blanket temperature must be self-limiting to 45 °C with ambient air temperature at 23 °C. The heater blanket must be capable of attachment to 12 inch DIA x 30 inch high gas cylinder. The temperature controller is to provide stable and programmable operating temperature between 15 – 40 °C. The heater blanket and temperature controller must operate on 115 VAC electrical power.

1.5.6. (Option) Remote readout display (SiCl4). A remote readout display providing operating status of the process-purge panel must be provided at a location within the clean-room. The location of the display will be in proximity to the ICP system and determined by NRL's Technical Representative in consultation with the vendor.

1.5.7. (Option) Weighing scale (SiCl4). A scale is to be provided to support the gas bottle and monitor the fill level of SiCl4 within the bottle.

1.5.8. (Option) SiCl4 gas bottle. The vendor is to provide one bottle of SiCl4 gas. The bottle must have CGA-approved fittings (DISS 636) that are compatible with the process panel and flow restrictor. Gas purity is to be 3N4 or better; nominal cylinder volume is 38 L. The cost of the bottle is to be included (no gas bottle rental and/or demurrage) and the vendor must be capable of providing future refill services for the bottle.

1.6. Non-Toxic Process Gases

1.6.1. Hydrogen (H2) gas regulator. The vendor is to provide at least one stainless steel dual-stage gas pressure regulator (CGA 350 or DISS 724) for hydrogen service. The regulator must provide gauge readouts of bottle pressure and regulator output pressure and a diaphragm shutoff valve. The regulator must be capable of operation at 5 – 30 psig at a gas flow of 0 - 1 SLPM. Dual ¼" male VCR output fittings are required, each having independent shutoff valve, to allow distribution of hydrogen to both the ICP and PECVD systems.

1.6.2. Restrictive flow orifice (H2). A flow restrictor attached to the gas bottle outlet is required to limit maximum output flow of H2 gas from the gas bottle to 500 SLPM or less at a bottle pressure of 2000 psig. (This value may be changed in consultation with the vendor to insure operation over full range of bottle pressures.)

1.6.3. (Option) H2 gas bottle. The vendor is to provide one bottle of H2 gas. The bottle must have CGA-approved fittings (CGA 350 or DISS 724) that are compatible with the regulator and flow restrictor. Gas purity is to be 5N or better; nominal cylinder volume is 49 L. The cost of the bottle is to be included (no gas bottle rental and/or demurrage) and the vendor must be capable of providing future refill services for the bottle.

1.6.4. Methane (CH4) gas regulator. The vendor is to provide at least one stainless steel dual-stage gas pressure regulators (CGA 350 or DISS 724) for methane service. The regulator must provide gauge readouts of bottle pressure and regulator output pressure and a diaphragm shutoff valve. The regulator must be capable of operation at 5 – 30 psig at a gas flow of 0 - 1 SLPM. Dual ¼" male VCR output fittings are required, each having independent shutoff valve, to allow distribution of methane to both the ICP and PECVD systems.

1.6.5. (Option) CH4 gas bottle. The vendor is to provide one bottle of CH4 gas. The bottle must have CGA-approved fittings (CGA 350 or DISS 724) that are compatible with the regulator and flow restrictor. Gas purity is to be 5N or better; nominal cylinder volume is 49 L. The cost of the bottle is to be included (no gas bottle rental and/or demurrage) and the vendor must be capable of providing future refill services for the bottle.

1.6.6. (Option) Non-toxic gas bottle cabinet. One dual gas bottle cabinet is required for the storage of process hydrogen and methane gases in Table 1, Items 1.1.d. and 1.1.e.

1.6.7. (Option) Oxygen (O2) gas regulator. The vendor must provide at least one stainless steel CGA type 540 gas regulator for oxygen service. The gas regulator must provide gauge readouts of bottle pressure and regulator output pressure and a diaphragm shutoff valve. The regulator must be capable of operation at 5 – 30 psig at a gas flow of 0 – 10 SLPM. Dual ¼" male VCR output fittings are required, each having independent shutoff valve.

1.6.8. (**Option) O2 gas bottle.** The vendor is to provide at least one bottle of O2 gas. The bottle must have CGA-approved fittings (CGA 540) compatible with the regulator. Gas purity is to be 4N5 or better; nominal cylinder volume is 44 L. The cost of the bottle is to be included (no gas bottle rental and/or demurrage) and the vendor must be capable of providing future refill services for the bottle.

1.6.9. (Option) Sulfur hexaflouride (SF6) gas regulator. The vendor is to provide at least one stainless steel dual-stage gas pressure regulator (CGA 590) for SF6 service. The regulator must provide gauge readouts of bottle pressure and regulator output pressure and a diaphragm shutoff valve. The regulator must be capable of operation at 5 – 30 psig at a gas flow of 0 - 1 SLPM. Dual ¼" male VCR output fittings are required, each having independent shutoff valve, to allow distribution of SF6 to both the Cl-ICP and previously installed Fl-ICP systems.

1.6.10. (Option) Gas cylinder heater blanket with temperature control (SF6). The vendor is to provide at least one gas cylinder heater blanket and temperature controller to enhance the delivery pressure of SF6. The blanket must be constructed having a protective layer so that heater elements have no direct electrical or mechanical contact to the gas bottle. Maximum blanket temperature must be self-limiting to 45 °C (maximum) with ambient air temperature at 23 °C. The heater blanket must be capable of attachment to 9 inch DIA x 51 inch high gas cylinder. The temperature controller is to

provide stable and programmable operating temperature between 15 – 40 °C. The heater blanket and temperature controller must operate on 115 VAC electrical power.

1.6.11. (Option) Argon/helium gas regulator. The vendor is to provide at least one stainless steel CGA type 580 gas regulator for argon/helium service. The gas regulator must provide gauge readouts of bottle pressure and regulator output pressure and a diaphragm shutoff valve. The regulator must be capable of operation at 5 – 30 psig at a gas flow 0 – 25 SLPM. Dual ¼" male VCR output fittings are required, each having independent shutoff valve.

1.6.12. (**Option) Ar gas bottle.** The vendor is to provide at least one bottle of Ar gas. The bottle must have CGA-approved fittings (CGA 580) that are compatible with the regulator. Gas purity is to be 5N or better; nominal cylinder volume is 49 L. The cost of the bottle is to be included (no gas bottle rental and/or demurrage) and the vendor must be capable of providing future refill services for the bottle.

1.6.13. (**Option) He gas bottle.** The vendor is to provide at least one bottle of He gas. The bottle must have CGA-approved fittings (CGA 580) that are compatible with the regulator. Gas purity is to be 5N or better; nominal cylinder volume is 49 L. The cost of the bottle is to be included (no gas bottle rental and/or demurrage) and the vendor must be capable of providing future refill services for the bottle.

1.6.14. Operating manuals and training. Operating manuals describing the operation of all components of the gas handling equipment must be provided. The gas delivery vendor must provide training on safe handling of gases for up to 5 NRL staff or contractors at NRL-DC.

Section 2. Cl-ICP Process Gas Delivery Lines and Installation. Refer to Figures 2 - 3 below for a schematic diagram of the connections required between the process gas cabinets and the Cl-ICP.

2.1. Double-wall stainless steel gas lines; Cl-ICP system. The vendor is to provide connection of five process gases: chlorine, boron trichloride, silicon tetrachloride, hydrogen, and methane to the Cl-ICP system using separate, double-wall stainless steel gas lines. The inner tube will transmit the process gas and is to be ¼” electropolished stainless steel equal to or better than Valex Corporation 401 (SP-9220 specification). The outer tube must be constructed of 316 stainless steel and must include a purge tee at the Cl-ICP system to source N2 purge gas and exhaust the purge gas to the corresponding gas cabinet. The outer coaxial tube is to fully enclose the inner process gas tube between the gas cabinets and the ICP system. The inner process line must withstand a 24-hour static pressure test at 200 psi (minimum) internal pressure with no greater than 2 psi pressure loss. The vendor should follow the diagram of Figures 2 - 3 with direction from the contracting officer’s technical representative during installation.

2.2. Single-wall stainless steel gas lines; Cl-ICP system. The vendor is to provide connection for sulfur hexaflouride, oxygen, argon and helium process gases from the gas cabinet to the Cl-ICP system. The tubing will transmit the process gas and is to be ¼” electropolished stainless steel equal to or better than Valex Corporation 401 (SP-9220 specification). The vendor must provide welded ¼”

female VCR fittings at both the gas cabinet end and ICP system end of the tubing. The process lines must withstand a 24-hour static pressure test at 200 psi (minimum) internal pressure with no greater than 2 psi pressure loss.

2.3. VCR fittings attachment for SF6, O2, Ar, He. The vendor is to provide ¼" male VCR welded fittings to ¼" stainless steel stubs for SF6, O2, Ar, and He at the Cl-ICP system.

2.4. Finish requirements. All process gas tubing must have a surface finish roughness (R_a) of 10 micrometers or less.

2.5. Weld standards. All welds to the system must be fully penetrated and meet SEMI Standard F78-0703.

Section 3. (Option) Cl-ICP Foreline/Exhaust line piping. It is necessary to connect the exhaust of the Cl-ICP system to the mechanical pump (Alcatel 2063C) and from the mechanical pump to the abatement system (see Figure 4). The mechanical pump for the Cl-ICP system will be located in the Utility Zone. NRL will utilize a Misonix, Inc. Mystaire spray abatement system, also located in the Utility Zone, to neutralize residual Cl2, BCl3, and SiCl4 gases and associated radicals from the Cl-ICP system.

3.1. Heated foreline. The vendor must supply a heated foreline tube connecting the Cl-ICP process exhaust port to the particulate/vapor sublimation trap. The tube material must be 2 inch DIA OD stainless steel and configured with heater tape with nominal operating temperature of 105 – 150 °C. Connection to the Cl-ICP system is to a DN40 type flange connector.

3.2. Particulate/vapor sublimation trap. The vendor shall supply a water-cooled stainless steel sieve particulate/vapor sublimation trap is required to filter condensable matter from the exhaust gas. The unit must have body diameter of 6 inches or greater and gas flow conductance of 20 L/sec-mTorr or greater.

3.3. Non-heated foreline. The vendor shall supply a 6' long x 2" OD (nominal) stainless steel foreline configured with connections appropriate for the particulate trap and welded NW 40, 90 º radius elbow at the pump end. Connection hardware including Viton o-ring seals must be included. The final dimensions are to be determined by NRL COR in consultation with the vendor.

3.4. Welded stainless steel exhaust line. A welded exhaust tube assembly is to be provided to connect the mechanical pump exhaust to the Misonix gas abatement system. An NW 40 connection is to be provided at the mechanical and a fitting to mate to PVC SCH 80 fitting on the Misonix Mystaire system. Figure 4 shows layout of the exhaust piping. The final dimensions are to be determined by NRL COR in consultation with the vendor.

Section 4. PECVD gas delivery equipment

4.1. Processs gases, PECVD system. The gas delivery associated with the PECVD system will take advantage of equipment and gases already present at NRL-DC. NRL-DC presently has silane and ammonia process panels. Methane and hydrogen will be provided per Section 1. The vendor must provide gas delivery equipment for nitrous oxide and the tetraflouromethane-oxygen mixture. Nitrogen and argon are also already present at the installation site but, due to the high flow requirements, it is requested the vendor provide pricing for optional equipment for these items. The gases to be delivered to the PECVD system are listed in Table 2.

Table 2. PECVD process gases.

Gas Reference	Gas	CAS No.	Minimum Purity	Min Flow Rate (SCCM)	Nom. Bottle Size (DIA x Height) (Inches)
4.1.a	Silane (SiH4)	7803-62-5	99.999%	500	9 x 51
4.1.b	Ammonia (NH3)	7664-41-7	99.999%	500	9 x 51
4.1.c	Hydrogen (H2)	1333-74-0	99.999%	300	10 x 55
4.1.d	Methane (CH4)	74-82-8	99.999%	300	10 x 55
4.1.e	Nitrous oxide (N2O)	10024-97-2	99.999%	4000	9 x 51
4.1.f	Tetraflouromethane-20% Oxygen Mixture CF4-20%O2	75-73-0	99.95%	1000	9 x 51
4.1.g	Argon (Ar)	7740-37-1	99.999%	4000	10 x 55
4.1.h	Nitrogen (N2)	7727-37-9	99.999%	4000	10 x 55

4.2 Nitrous oxide (N2O) process gas.

4.2.1. Nitrous oxide (N2O) gas regulator. The vendor shall supply at least one stainless steel dual-stage gas pressure regulator (CGA 326 or DISS 712) for N2O service. The regulator must provide gauge readouts of bottle pressure and regulator output pressure and a diaphragm shutoff valve. The regulator must be capable of operation at 5 – 30 psig at a gas flow of 0 - 4000 SCCM. Output fitting is to be ¼" male VCR.

4.2.2. (Option) Weighing scale (N2O). A scale is to be provided to support the gas bottle and monitor the fill level of N2O within the bottle.

4.2.3. (Option) N2O gas bottle. The vendor is to provide at least one bottle of N2O gas. The bottle must have CGA-approved fittings (CGA 326 or DISS 712) that are compatible with the regulator. Gas purity is to be 5N or better; nominal cylinder volume is 44 L. The cost of the bottle is to be included (no gas bottle rental and/or demurrage) and the vendor must be capable of providing future refill services for the bottle.

4.3 Tetraflouromethane – 20% oxygen (CF4-20% O2) process gas.

4.3.1. Tetraflouromethane-20% oxygen (CF4-20%O2) gas regulator. The vendor shall supply at least one stainless steel dual-stage gas pressure regulator (CGA 540 or DISS 714) for CF_4-20% O_2 service. The gas regulator must provide gauge readouts of bottle pressure and regulator output pressure and a diaphragm shutoff valve. The regulator must be capable of operation at 5 – 30 psig at a gas flow of 0 - 1000 SCCM. Output fitting is to be ¼" male VCR.

4.3.2. (Option) Weighing scale (CF4-20%O2). A scale is to be provided by the vendor to support the gas bottle and monitor the fill level of CF4-20%O2 within the bottle.

4.3.3. (Option) CF4-20% O2 gas bottle. The vendor shall provide at least one bottle of CF4-20%O2 gas. The bottle must have CGA-approved fittings (CGA 540 or DISS 714) that are compatible with the regulator. Gas purity is to be 3N5 or better; nominal cylinder volume is 44 L. The cost of the bottle is to be included (no gas bottle rental and/or demurrage) and the vendor must be capable of providing future refill services for the bottle.

4.3.4. (Option) Gas bottle cabinet. One dual gas bottle cabinet shall be provided by the vendor for the storage of process nitrous oxide and CF_4-20% O_2 mixture gas itemized in 4.1.e and 4.1.f above.

4.4. Argon/Nitrogen Gas Delivery Equipment.

4.4.1. (Option) Argon (Ar) gas regulator. The vendor shall supply at least one stainless steel dual-stage gas pressure regulator (CGA 580) for Ar service. The gas regulator must provide gauge readouts of bottle pressure and regulator output pressure and a diaphragm shutoff valve. The regulator must be capable of operation at 5 – 30 psig at a gas flow of 0 - 20 SLPM. Output fitting is to be ¼" male VCR.

4.4.2. (**Option) Ar gas bottle.** The vendor shall provide at least one bottle of Ar gas. The bottle must have CGA-approved fittings (CGA 580) that are compatible with the regulator. Gas purity is to be 5N or better; nominal cylinder volume is 49 L. The cost of the bottle is to be included (no gas bottle rental and/or demurrage) and the vendor must be capable of providing future refill services for the bottle.

4.4.3. (Option) Nitrogen (N2) gas regulator. The vendor shall provide at least one stainless steel dual-stage gas pressure regulators (CGA 580) for N2 service. The gas regulators must provide gauge readouts of bottle pressure and regulator output pressure and a diaphragm shutoff valve. The regulator must be capable of operation at 5 – 30 psig at a gas flow of 0 - 20 SLPM. Output fitting is to be ¼" male VCR.

4.4.4. (**Option) N2 gas bottle.** The vendor shall provide at least one bottle of N2 gas. The bottle must have CGA-approved fittings (CGA 580) that are compatible with the regulator. Gas purity is to be 5N or better; nominal cylinder volume is 49 L. The cost of the bottle is to be included (no gas bottle rental and/or demurrage) and the vendor must be capable of providing future refill services for the bottle.

4.4.5. (Option) Gas bottle cabinet. One dual gas bottle cabinet is to be provide by the vendor for the storage of process N2 and Ar gases itemized in 4.1.g and 4.1.h above.

4.5. Operating manuals and training. Operating manuals describing the operation of all components of the gas handling equipment must be provided. The gas delivery vendor must provide training on safe handling of gases for up to 5 NRL staff or contractors at NRL-DC.

Section 5. (Option) Silane, Ammonia Sensor System Upgrade. NRL presently has equipment provided by Spectra Gases, Inc. for delivery of silane, ammonia, and dichlorosilane to a furnace system. The vendor is required to provide the following items to upgrade the presently installed system.

5.1 Ammonia (NH3) toxic gas sensors upgrade. Two additional gas sensor units are to be provided and interfaced to the gas cabinet controller for NH3. The present system supports two gas sensors. The additional sensors will be placed in proximity to the PECVD system and at the abatement system exhaust. The sensors must interface to the controller unit and provide a signal initiating shutdown of the primary gas valve at concentrations of 35 ppm or greater at any of the sensor locations. Preference is given to configurations allowing identification of each sensor uniquely for a failure condition.

5.2. Silane (SiH4) toxic gas sensors upgrade. Two additional gas sensor units are to be provided and interfaced to the gas cabinet controller for SiH4. The present system supports two gas sensors. The additional sensors will be placed in proximity to the PECVD system and at the abatement system exhaust. The sensors must interface to the controller unit and provide a signal initiating shutdown of the primary gas valve at concentrations of 8 ppm or greater at any of the sensor locations. Preference is given to configurations allowing identification of each sensor uniquely for a failure condition.

5.3. Silane (SiH4) UV/IR Electro-Optical Fire Detector. The vendor shall provide and install an IR/UV fire detector that will initiate shutdown of the primary gas valve upon detection of flame within the silane gas cabinet.

5.4. Dichlorosilane (SiCl2H2) toxic gas sensors upgrade. One additional gas sensor unit is to be provided by the vendor and interfaced to the gas cabinet controller for SiCl2H2. The present system supports two gas sensors. The additional sensor will be placed at the abatement system exhaust. The sensor must interface to the controller unit and provide a signal initiating shutdown of the primary gas valve at concentrations of 5 ppm or greater at any of the sensor locations. Preference is given to configurations allowing identification of each sensor uniquely for a failure condition.

5.5. Dichlorosilane (SiCl2H2) UV/IR Electro-Optical Fire Detector. The vendor is to supply and install an IR/UV fire detector that will initiate shutdown of the primary gas valve upon detection of flame within the dichlorosilane gas cabinet.

Section 6. PECVD gas delivery installation.

6.1. Double-wall stainless steel gas lines; PECVD system. The vendor is to provide connection of four process gases: silane, ammonia, hydrogen, and methane to the PECVD system using separate, double-wall stainless steel gas lines. The inner tube will transmit the process gas and is to be ¼" electropolished stainless steel equal to or better than Valex Corporation 401 (SP-9220 specification).

The outer tube must be constructed of 316 stainless steel and must include a purge tee at the PECVD system to source N2 purge gas and exhaust the purge gas to the corresponding gas cabinet. The outer coaxial tube is to fully enclose the inner process gas tube between the gas cabinets and the ICP system. The inner process line must withstand a 24-hour static pressure test at 200 psi (minimum) internal pressure with no greater than 2 psi pressure loss. The vendor should follow the diagram of Figures 1 - 3 with direction from the contracting officer's technical representative during installation.

6.2. Single-wall stainless steel gas lines; PECVD system. The vendor is to provide connection for nitrous oxide, CF4-20% oxygen, nitrogen, and argon process gases from the gas cabinet to the PECVD system. The tubing will transmit the process gas and to be ¼" electropolished stainless steel equal to or better than Valex Corporation 401 (SP-9220 specification). The vendor should follow the diagram of Figures 1 - 3 with direction from the contracting officer's technical representative during installation. The vendor must provide ¼" female VCR fittings at both the gas cabinet end and PECVD end of the tubing. The process lines must withstand a 24-hour static pressure test at 200 psi (minimum) internal pressure with no greater than 2 psi pressure loss.

6.3. VCR fittings attachment for N2O, CF4-20% O2, N2, Ar. The vendor is to provide ¼" male VCR welded fittings to ¼" stainless steel stubs for N2O, CF4-20% O2, N2, and Ar at the PECVD system.

6.4. Finish requirements. All process gas tubing must have a surface finish roughness (R_a) of 10 micrometers or less.

6.5. Weld standards. All welds to the system must be fully penetrated and meet SEMI Standard F78-0703.

Section 7. (Option) PECVD Abatement System. NRL requires a chemical abatement unit to neutralize residual silane, ammonia and amino-silane radicals from the exhaust of the PECVD system (Oxford Plasmalab System 100). The vendor shall provide a chemical abatement system that will reduce the concentration of residual silane and ammonia process gases to less than 2 ppm. The system must also be compatible with residual gases itemized in Table 2. The system will be placed in the utility zone of NRL B250. The system is to be of passive dry chemical absorbance or gas reactor column design. The unit must provide gauging to allow monitoring of usage level and the vendor must provide the appropriate material. The system must be SEMI S2-93 certified. Input and exhaust flanges are to be NW 40.

Section 8. (Option) PECVD Foreline/Exhaust line. The vendor shall connect the exhaust of the PECVD system to the mechanical pump (Alcatel 602P) and from the mechanical pump to the abatement system (see Figure 5). The mechanical pump for the PECVD system will be located in the Utility Zone.

8.1. Heated foreline. The vendor must supply a heated foreline tube connecting the PECVD process exhaust port to the particulate trap. The tube material must be 3 inch DIA OD stainless steel and configured with heater tape with nominal operating temperature of 105 – 150 °C. Connection to the Cl-ICP system is to a DN40 type flange connector.

8.2. Particulate/vapor sublimation trap. A water-cooled stainless steel sieve particulate/vapor sublimation trap must be provided by the vendor to filter condensable matter from the exhaust gas. The unit must have body diameter of 6 inches or greater and gas flow conductance of 20 L/sec-mTorr or greater.

8.3 Non-heated foreline. A 6' long x 3" OD stainless steel foreline configured with connections appropriate for the particulate trap and welded DN100, 90 º radius elbow at the pump end. Connection hardware including Viton o-ring seals must be included. The final dimensions are to be determined by NRL COR in consultation with the vendor.

8.4. Welded stainless steel exhaust line. A welded exhaust tube assembly must be provided by the vendor to connect the mechanical pump exhaust to the gas abatement system. An NW 40 connection must be provided at both the mechanical pump and abatement system ends. Figure 5 shows layout of the exhaust piping. The final dimensions are to be determined by NRL COR in consultation with the vendor.

Section 9. (Option) Self-contained breathing apparatus (SCBA).

The vendor shall provide at least one open-circuit, self-contained breathing apparatus for use during toxic gas bottle installation and change-out. The unit must have 1) cylinder and valve assembly for storing breathing air under pressure, 2) full facepiece assembly, 3) a removable, facepiece-mounted, positive pressure breathing regulator with air-saver switch and purge valve; 4) a harness and backframe assembly for supporting the equipment on the body of the wearer, and 5) a shoulder strap mounted, remote gauge indicating cylinder pressure. The SCBA is to be certified by NIOSH as conforming to the Code of Federal Regulations, Title 42, Part 84.

9.1. Breathing air cylinder and valve assembly. The vendor shall provide at least one 2216 psig breathing air cylinder and valve assembly constructed in accordance with Department of Transportation specifications. The cylinder must have a duration of at least 30 minutes as rated by NIOSH and should be constructed of lightweight materials with a free gas capacity of 45 cubic feet. The cylinder is to be configured with CGA 346 connection and the regulator must have a dual reading pressure gauge indicating cylinder pressure at all times.

9.2. Facepiece assembly. Two facepiece assemblies must be provided by the vendor for use by NRL personnel. Choice of facepiece size will be in consultation with two NRL staff members dedicated to providing service for toxic gas handling equipment. Each unit must be equipped to allow voice communication and minimize lens fogging.

9.3 Positive pressure regulator. The unit must be configured with a positive pressure breathing regulator mounted to the facepiece and shall supply and maintain breathing air to the user at a pressure greater than the atmospheric pressure by no more than 1.5 inches of water column. The breathing regulator should maintain positive pressure for flow up to 500 SLPM.

9.4. Harness and backframe assembly. The vendor shall provide a lightweight, adjustable, lumbar support style harness and backframe assembly to be used to carry the cylinder and valve assembly and pressure reducer assembly. The harness should be configured for the bulk of the weight to be supported by the hips with waist belt and buckle attachments to secure the harness.

9.5. System weight. The weight of the total system with loaded gas cylinder is to be less than 30 lbs.

9.6. Operating manual and training. The vendor shall provide two operating manuals and full operational training for at least two NRL personnel at the Washington, DC location.

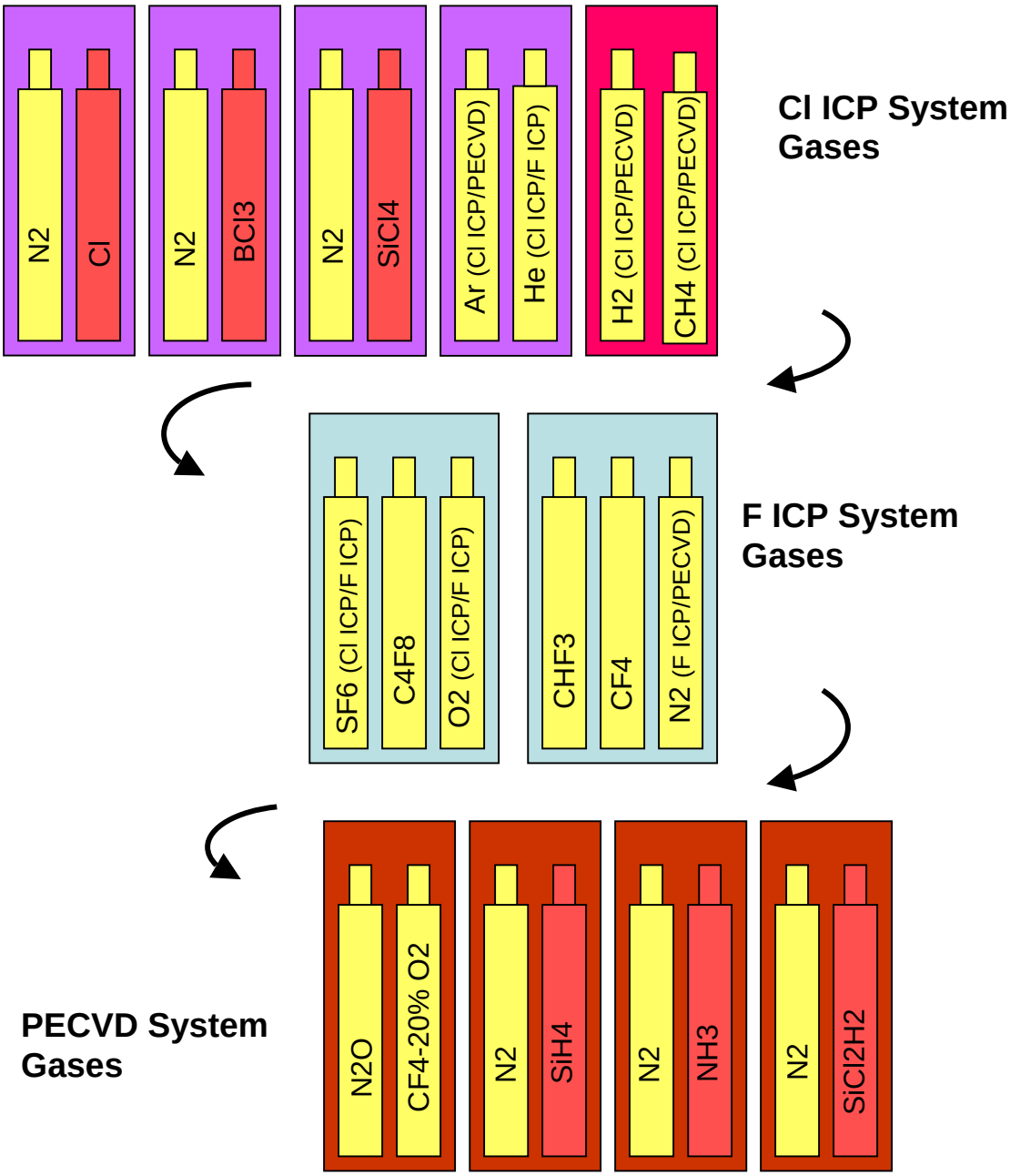

Figure 1. Gas bottle cabinet identification and layout.

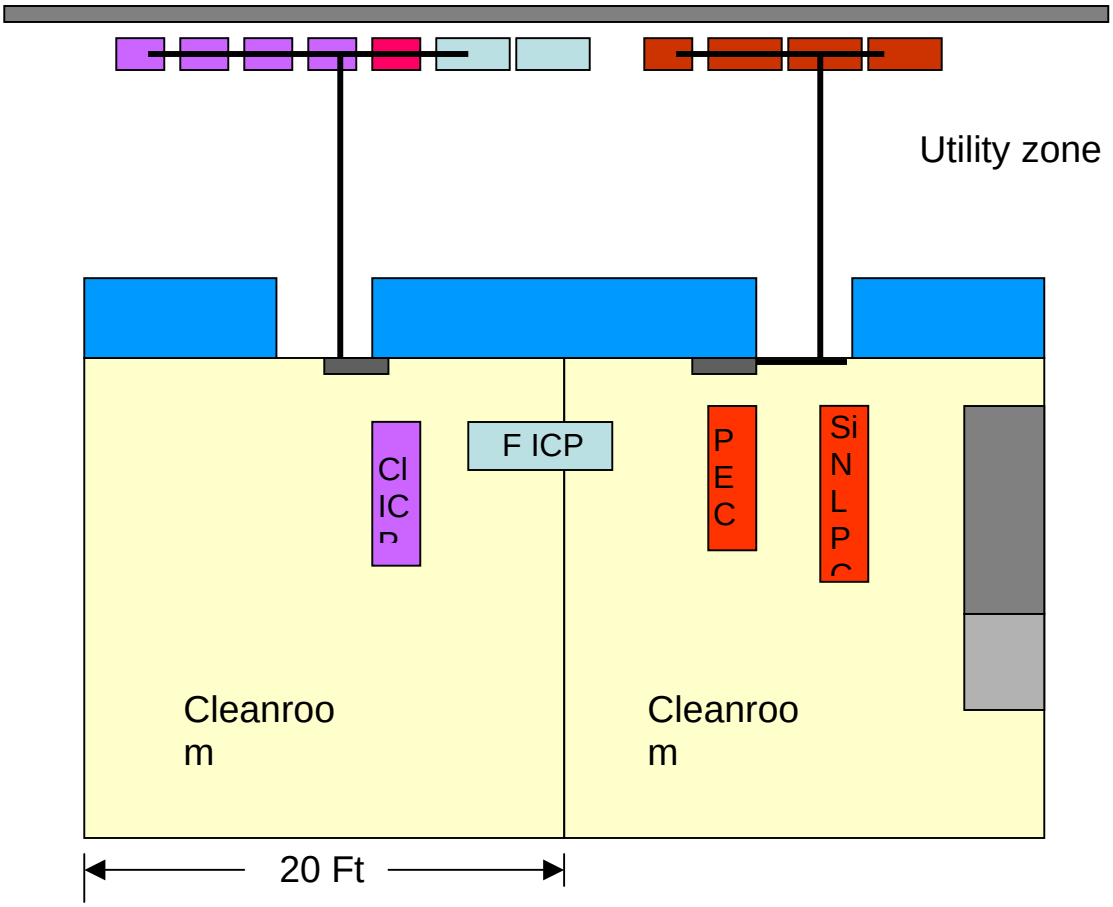

Figure 2. Plan view showing gas cabinet placement in utility zone and cleanroom system layout.

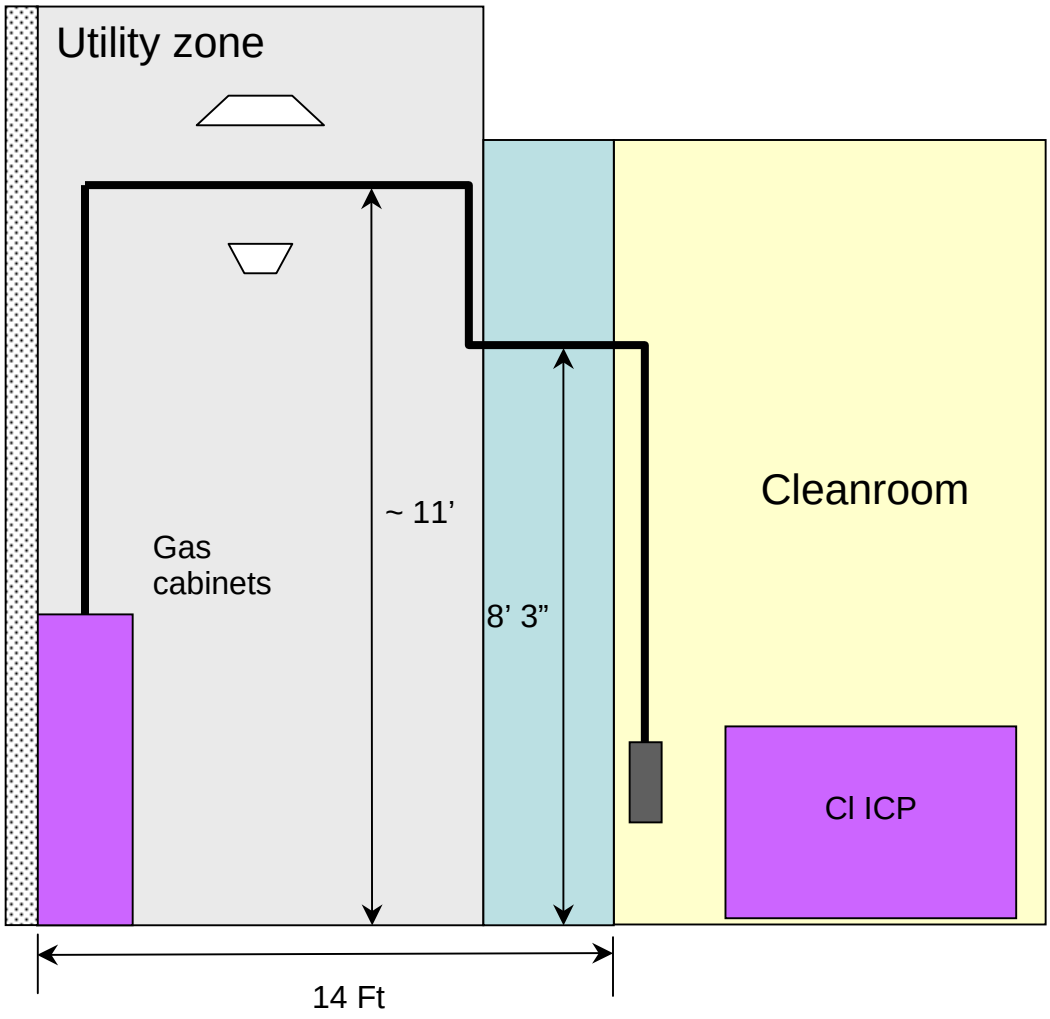

Figure 3. Cross-sectional view of B250 installation area.

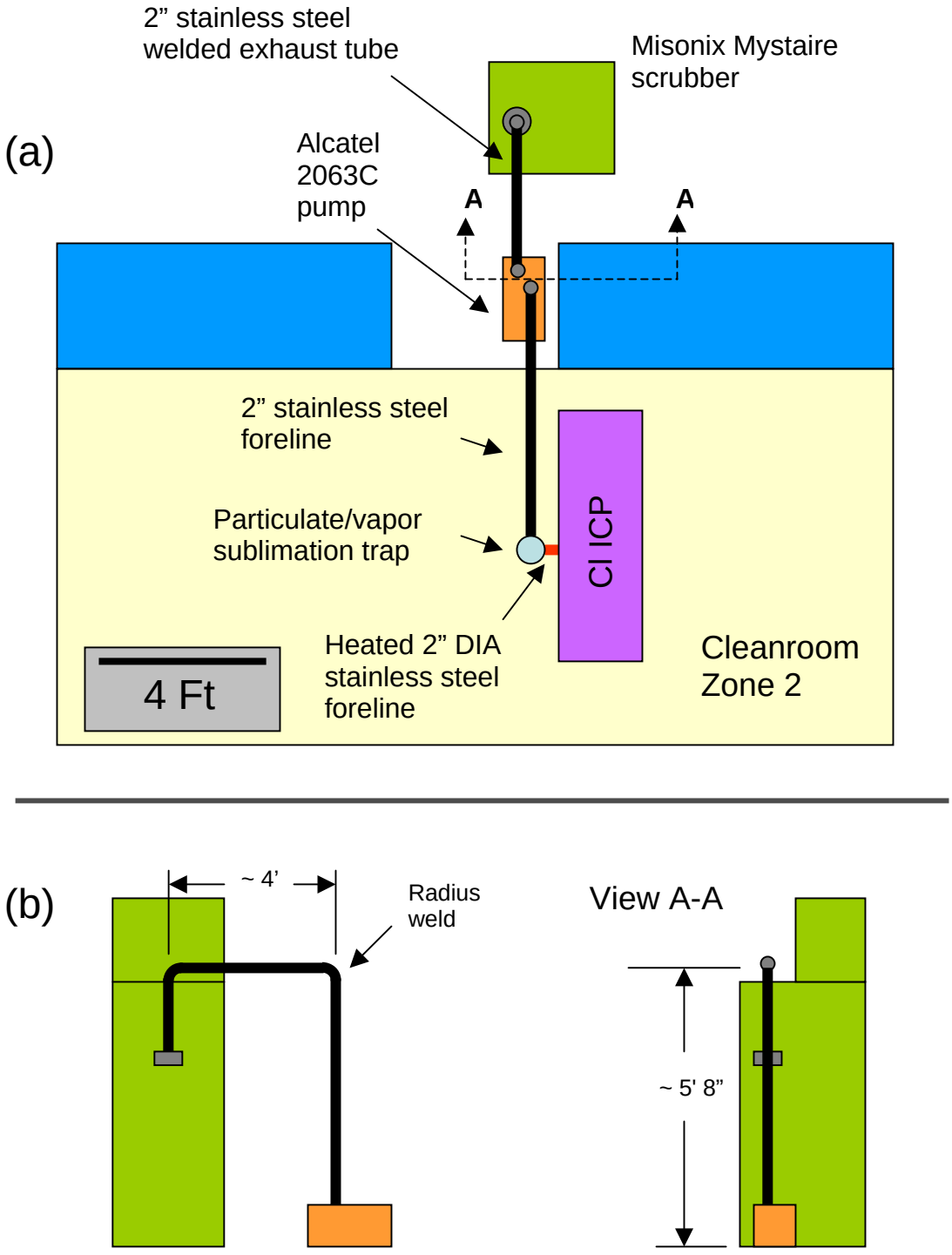

Figure 4. Plan view (a) and side view (b) of Cl-ICP exhaust plumbing

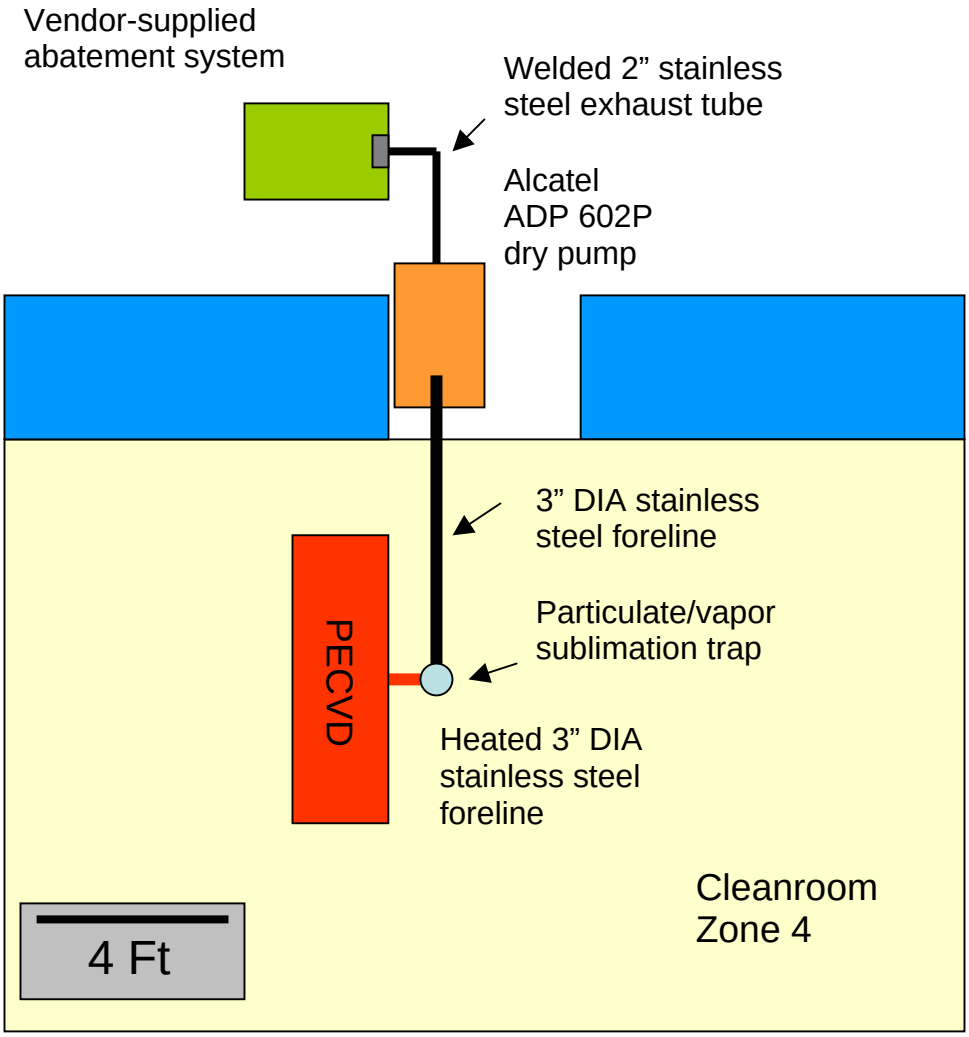

Figure 5. Plan view of PECVD system exhaust layout and location of abatement system.