REVISIONS				
ZONE	LTR	DESCRIPTION	DATE	APPROVED

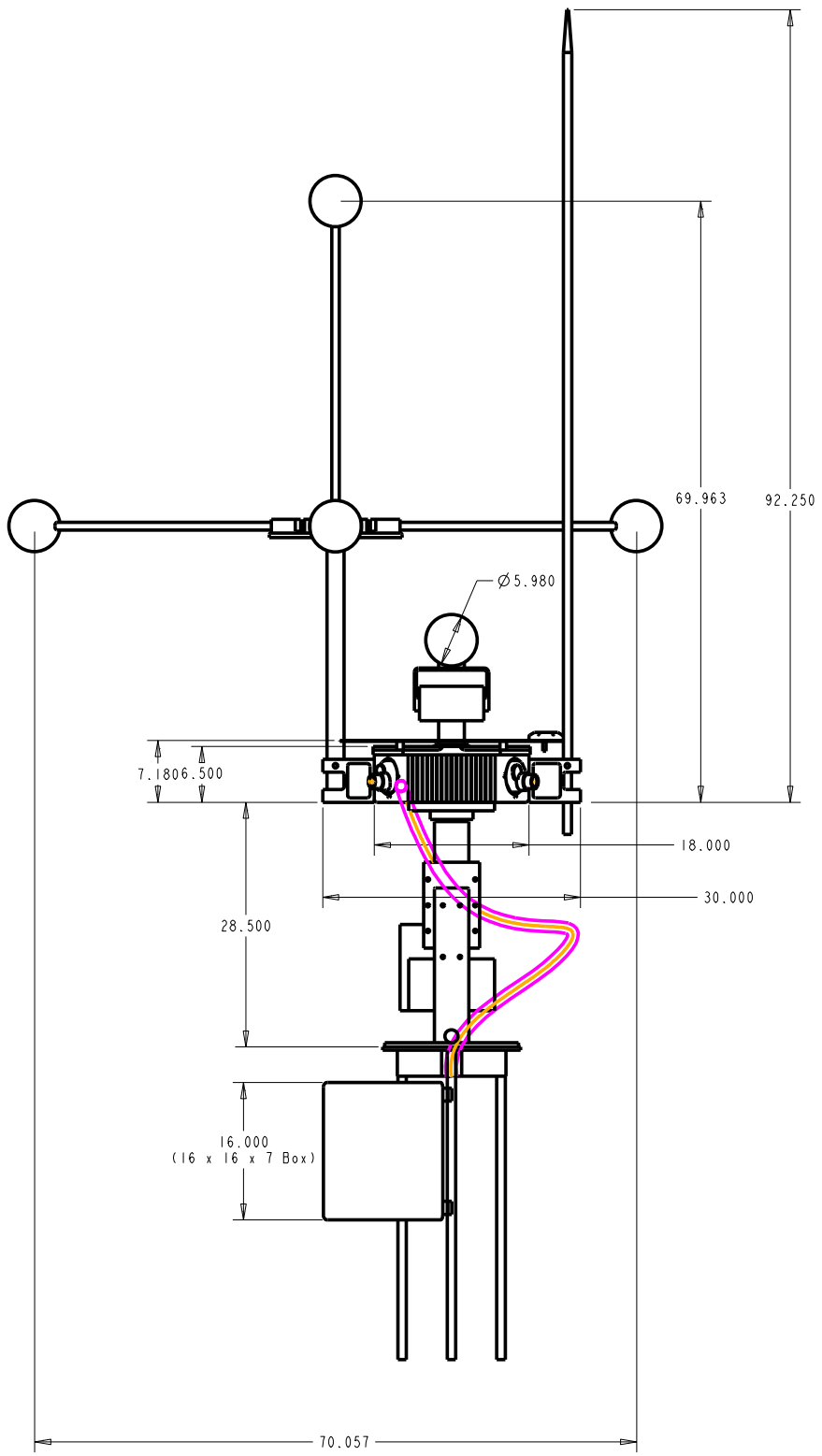

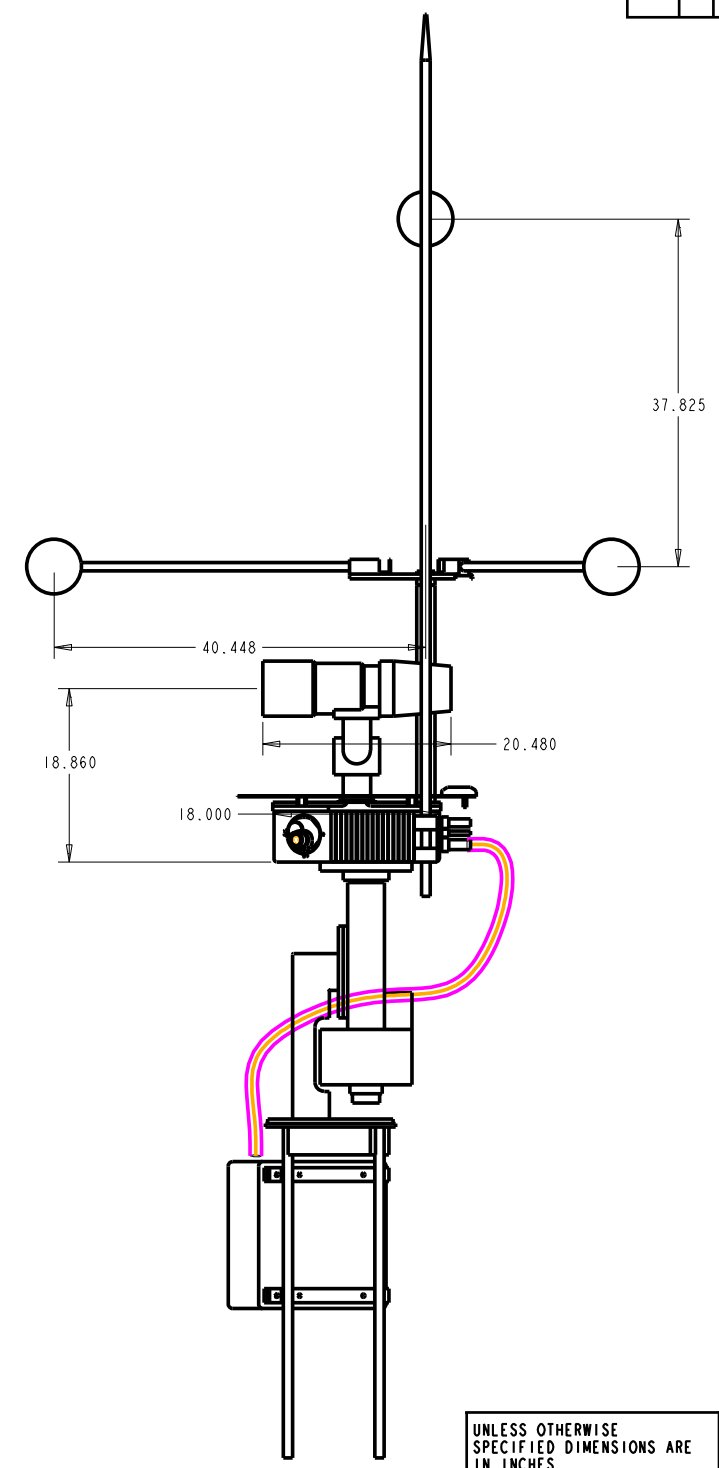

SCALE 0.100

UNLESS OTHERWISE SPECIFIED DIMENSIONS ARE IN INCHES

TOLERANCES: ANGLES: ± 0.5°
FRACTIONS: ±
1 PLACE DECIMALS: ± 0.1
2 PLACE DECIMALS: ± 0.01
3 PLACE DECIMALS: ± 0.001

MATERIAL:

ENGINEER:	DATE: 10-Nov-04	TEL:
DESIGNER:	DATE: 10-Nov-04	TEL:
DRAWN BY: gs page	DATE: 10-Nov-04	TEL: 404-1251
CHECKED BY:	DATE:	TEL:
APPROVED BY:	DATE:	TEL:

OFFBOARD COUNTERMEASURES

TACTICAL ELECTRONIC WARFARE DIVISION
NAVAL RESEARCH LABORATORY
WASHINGTON, D.C.20375

Overall Assembly Views

RLS

SIZE	CODE IDENT NO.	DWG. NO.
D	81995	RLS - 1000
SCALE: 0.100		SHEET 1 OF 1