SPECIFICATIONS (Revised 20041210)

This acquisition is for a Low Power Anechoic Chamber Target System Design. The target system, which has been affectively called an x-y plotter will be independently controlled and programmable in all directions. The controller must be able to be reactive to a direct analogue(s) signal from a main frame computer or be programmable point to point, loop, or go to any of several pre-selected positions. The anechoic chamber is best run with no exposed metal therefore the x-y plotter vertical strut shall be modified to include a composite structure made of EXTREN[1] for its center10 foot section. EXTREN is a re-enforced fiberglass product of various structure shapes that is non-metallic and can be combined to replace the aluminum extrusion but must be designed to the same structural strength and inertia as the extrusion allowing the vertical strut to operate as the original actuator. Stopping the motions of the slide and horn and the components such as the motors, encoders, brakes and sensors are all critical to the design of this system.

The chamber maximum dimensions are shown in Figure 1. They absolutely define the limit of all mechanical parts of the plotter. The working area of the plotter however is 120” x 120” as shown in Figure 2.

My translation of the parameters of the new pedestal to linear performance required of the x-y plotter horn, mounted on the vertical element of the plotter, is in red in Table 1 below.

positioner data	x-y plotter
position data	position data
el&az accuracy 2arc sec	0.004"
el&az resolution .004 deg	0.0025"
el&az repeatability .2 arc sec	0.0004"
rate data	rate data
el&az range 0-100 deg/sec	0-314"/sec
el&az accuracy 0.4%	2.5"/sec
el&az resolution .002 deg/sec	.01"
acceleration	acceleration
el&az acceleration 420 to 1250 deg/sec/sec (load dependent)	501 to 1276 in/ sec/sec (load dependent)

1

TABLE 1

Performance: The x and y motion must be independently controllable and programmable however the two y rails shown in Figure 2 (top and bottom) must move exactly the same in all respects at all times. The controller must be able to be reactive to a direct analogue(s) signal from a main frame computer or be programmable point to point, loop, or go to any of several pre-selected positions, etc.

Modification of the vertical element: The anechoic chamber is best run with no exposed metal. The floor and ceiling rails will be beneath the level of the anechoic material. The vertical strut, though an actuator like the horizontal units, may be modifiable over the center 10 ft with a composite like EXTREN (http://www.strongwell.com/PultrudedProducts/Extren.HTM). An EXTREN structure or combination of EXTREN components forming a structure with the same structural strength and inertial properties as the extrusion or other such non- metallic material replaces the aluminum extrusion to provide strength and supporting surfaces allowing the vertical strut to operate as the original actuator. At this point in the design we lack specific knowledge of all types of actuators and so have arbitrarily chosen one to discuss, i.e., the MACRON 6 and MACRON SINGLE BELT DRIVE (http://www.macrondynamics.com), though we need a more detailed consideration of the MACRON 6 design and function or any unit which would be used vertically visa-a-vie the modification of its center 10 feet in EXTREN (see the APPENDIX). Other products may be more amenable to this modification and may be substituted. Our fall back position is to simply use a standard actuator with absorbing material on the sides and back like ECCOSORB (by EMERSON AND CUMING) which is the premise of the basic design below.

System construction: Figure 3 depicts the floor mounting of the system. The ceiling mounting is similar but the ¾ inch steel plate will have to be bolted to the top of the chamber as opposed to using a HILTI system attachment through the steel into the concrete which is preferable for stability. The steel plate provides the base for the y axis actuators and the slide rail. The connection between the actuator and the rail sliders or guides and the method of attachment of the vertical actuator is left to the vender[2].

[2] The term vender used in this RFQ refers to the selected company who will build the entire system, not the any of the product providers referenced in this document.

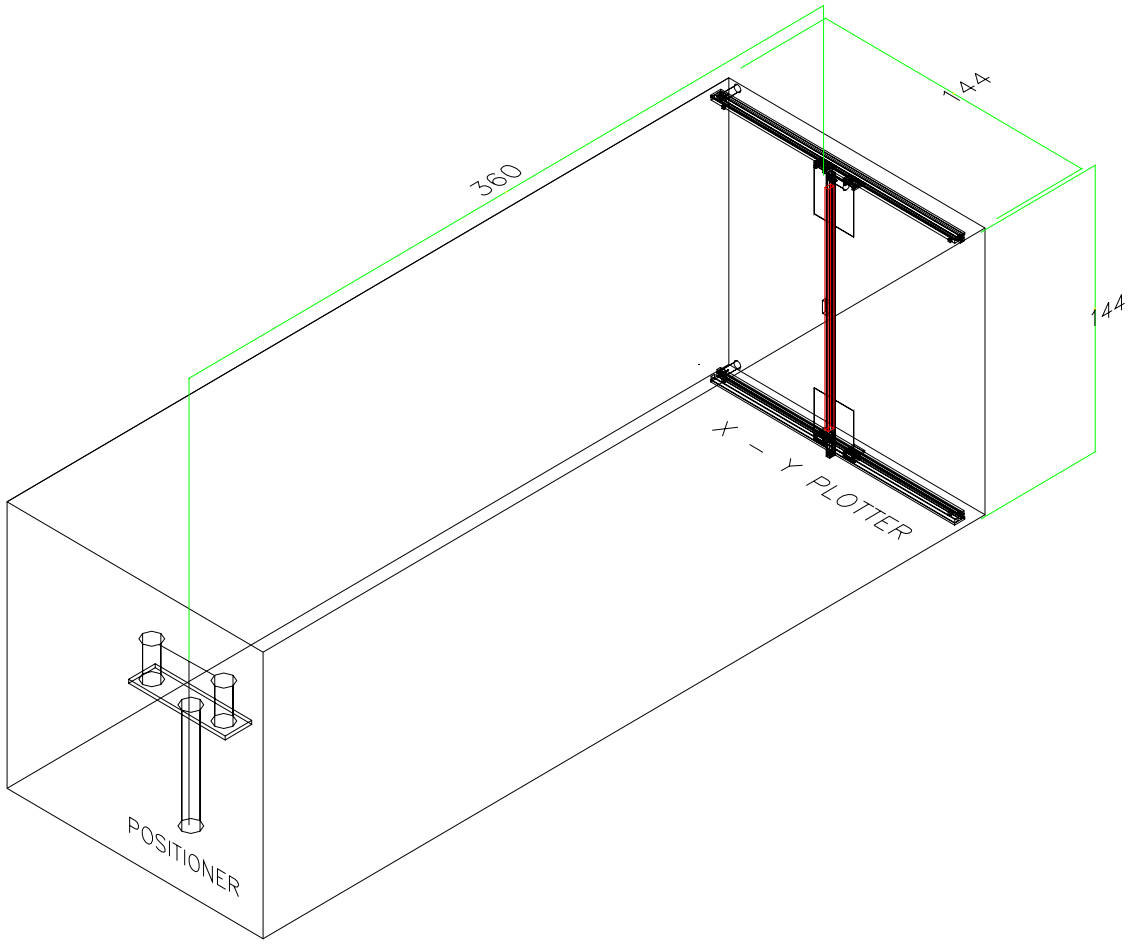

FIGURE I
ANECHOIC CHAMBER

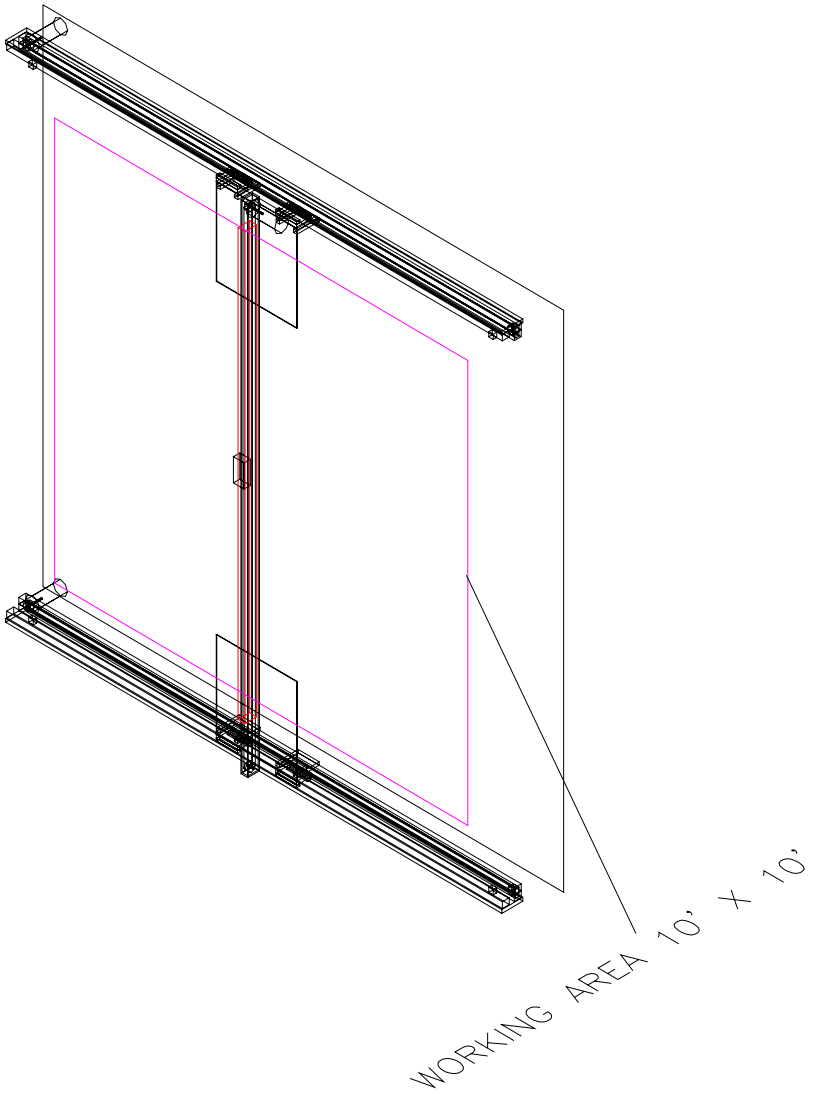

FIGURE 2
X-Y PLOTTER

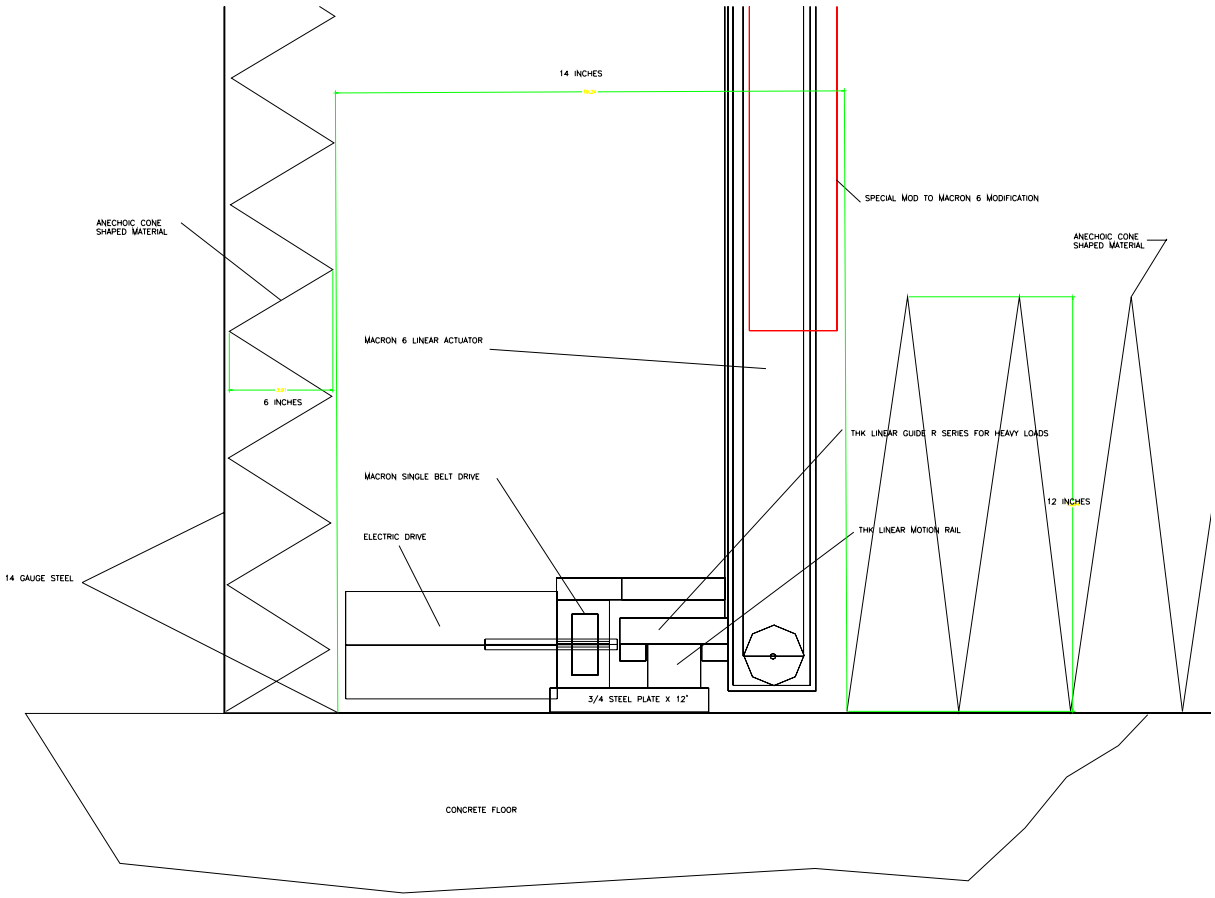

FIGURE 3

DETAIL OF CONSTRUCTION

Stops: The motion and stopping of the slide and horn is to be done programmatically via the drive and brake system. However, if that fails we wish two fail safes, an electronic cutoff switch to the drives and then a mechanical hard stop as shown in Figure 4.

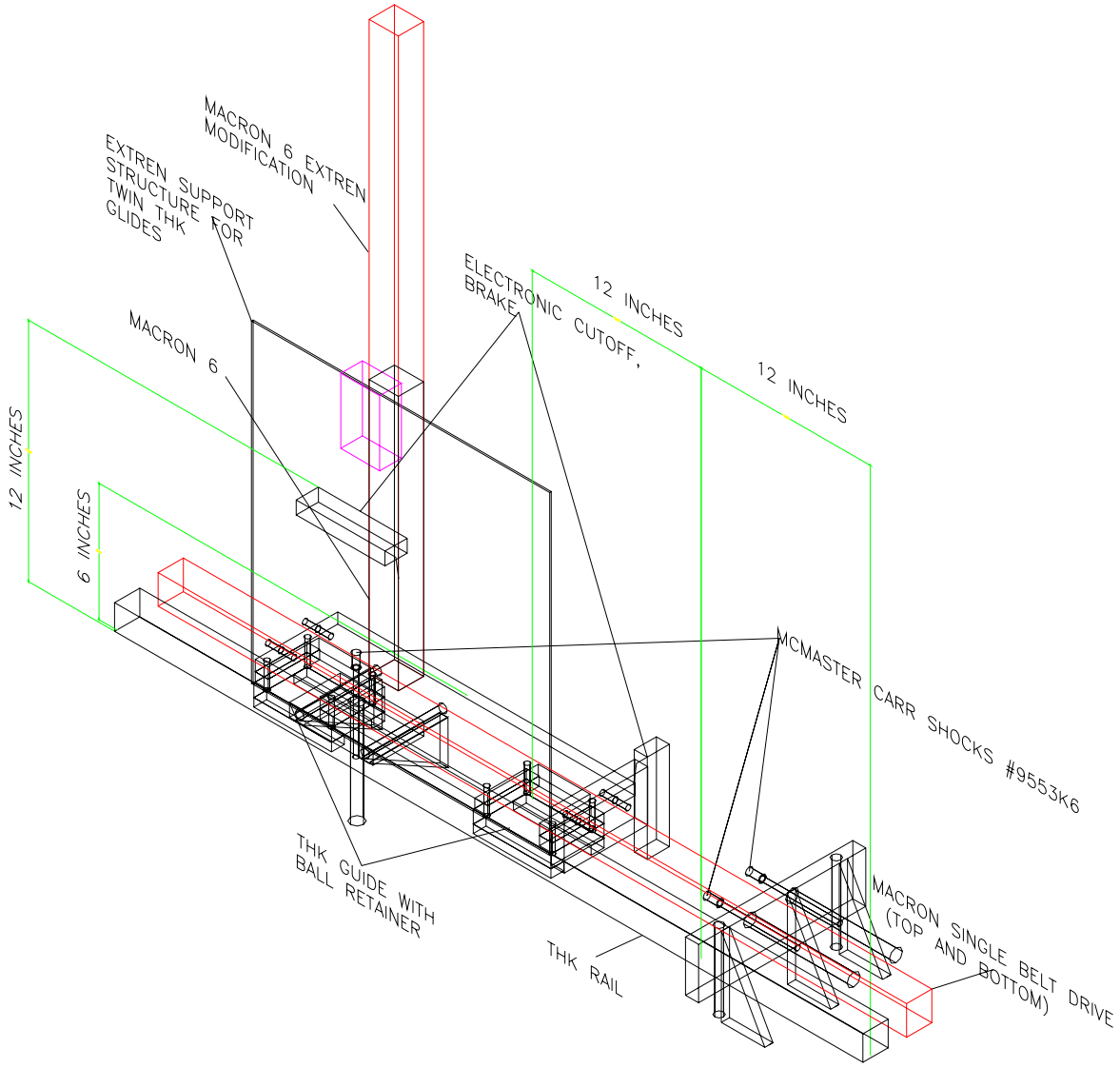

FIGURE 4
FURTHER DESIGN CONSIDERATIONS

<u>The horn rotator</u>: The magenta colored block, shown in Figure 4 on the vertical actuator represents a mechanism which is used to attach the horn antenna to the actuator slide. This mechanism is required to rotate the horn such that it will always point to the center

point of the crossing of the positioners horizontal and vertical rotational axes. This motion must be synchronous with the plotters linear motion. The mechanism is depicted in Figure 5. An example of that which is required is the side view mirror on a contemporary car, which rotates up or down and in and out yet is small and light as is our horn.

The horn has a maximum weight of 5 pounds. A light weight rotating system is important to maintain pointing and vertical position because this mechanism is attached directly to the actuator slide. Rotational speed, velocity and accelerations for this device are the "reverse" of those of the positioner, that is the motion of the rotators must be exactly those of the positioner but in the opposite direction. The range of rotation of this special mechanism is approximately 10 degrees in both directions.

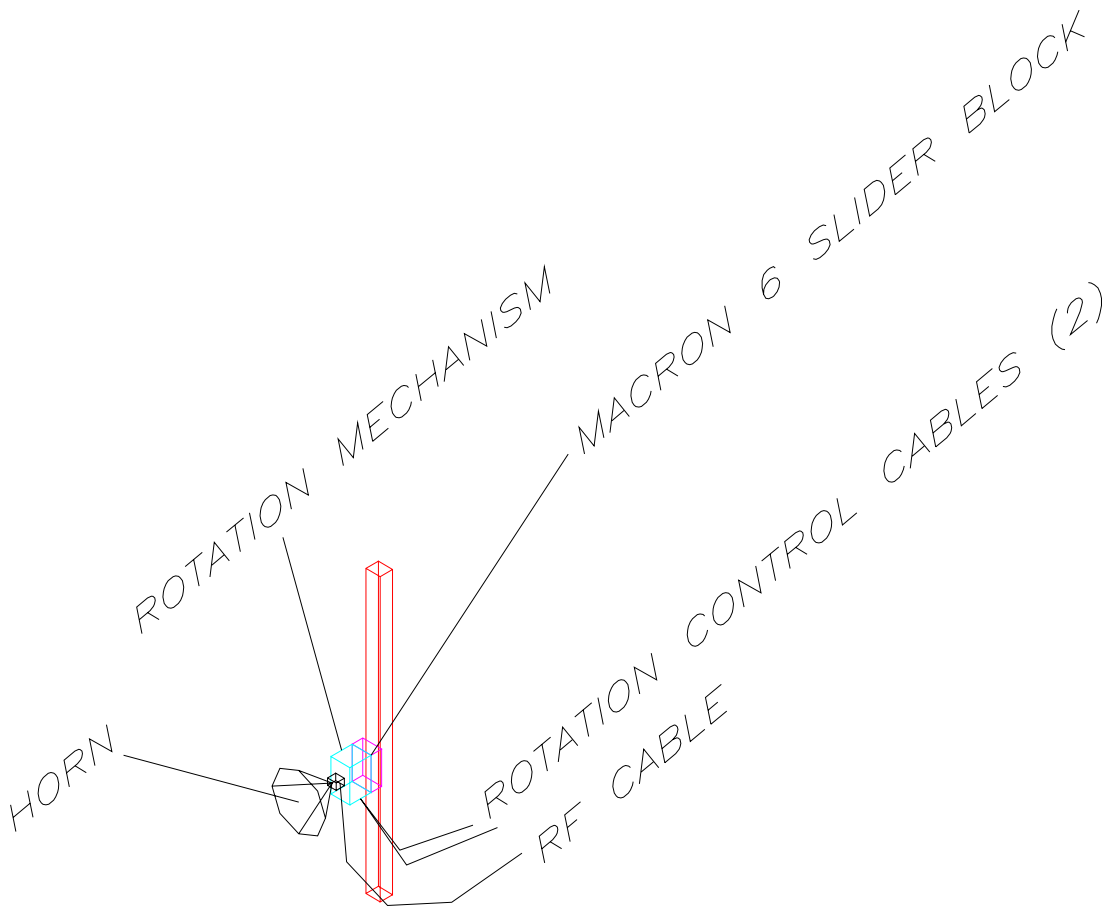

Figure 5
Horn rotator

Components: Motors, encoders, brakes, sensors, etc.: The Figure below is a "mechanical" interpretation of the drive electronics for the system.

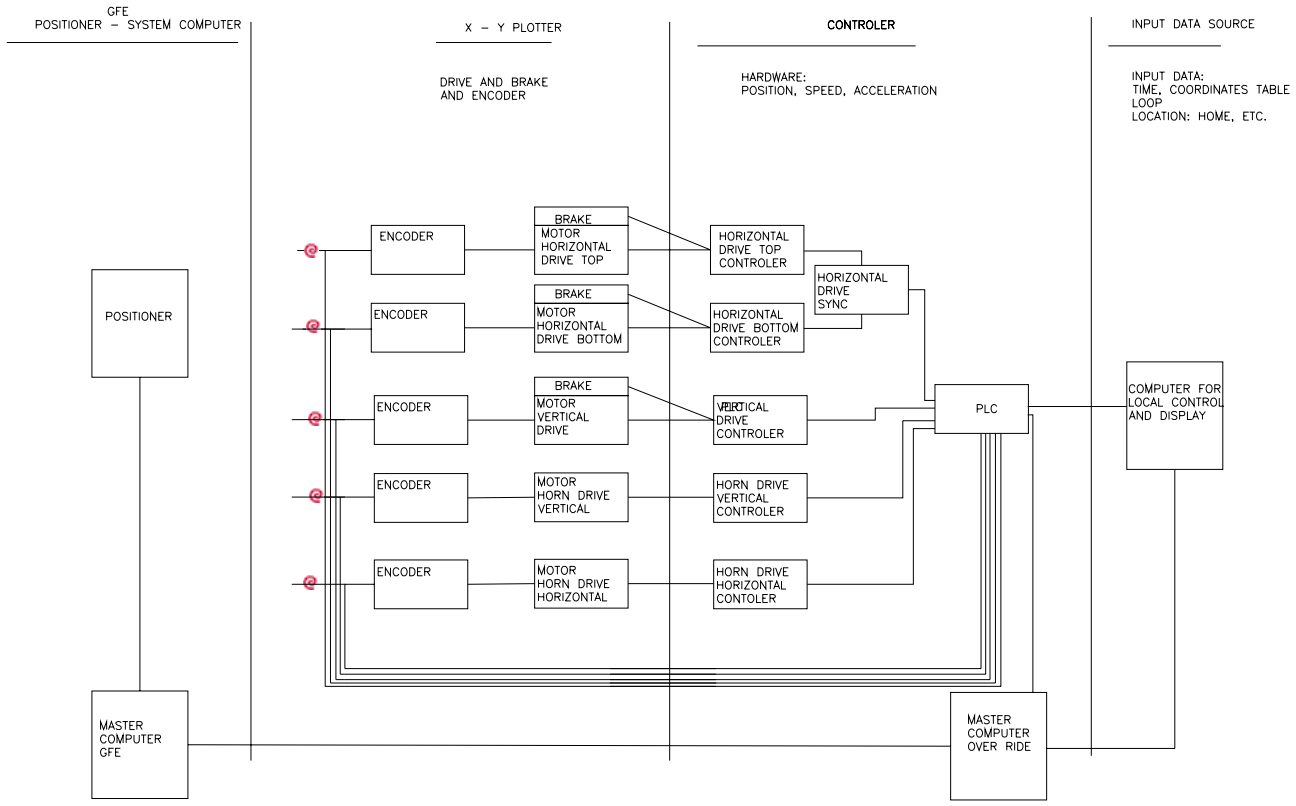

Figure 6
Control System

Positioner-computer- plotter interface: The master computer up-date rate to the PLC must be one millisecond or less therefore commands within the system must be significantly faster. The data provided from the main frame computer (SYSTRAN DAC) is two analogue voltages, both between +/- 10 volts, one each for the x and y axis. The resolution is 4.88 mill-Volts with an output current of +/- 20 mill-Amps.

The computer and any other system hardware which can be external to the chamber are to be rack mounted in a standard 19" frame provided by the vender.

Factory acceptance test: The vender will test entire system at the factory using a 5-pound weight as the horn. The vender will demonstrate the system capabilities via the computer for local control and separately through the master computer over ride.

Installation: The vender will install the x-y plotter in the anechoic chamber at NRL.

APPENDIX

The internet site for MACRON shows the MACRON 6 actuator cross section for the 10 foot center section discussed above in the figure below.

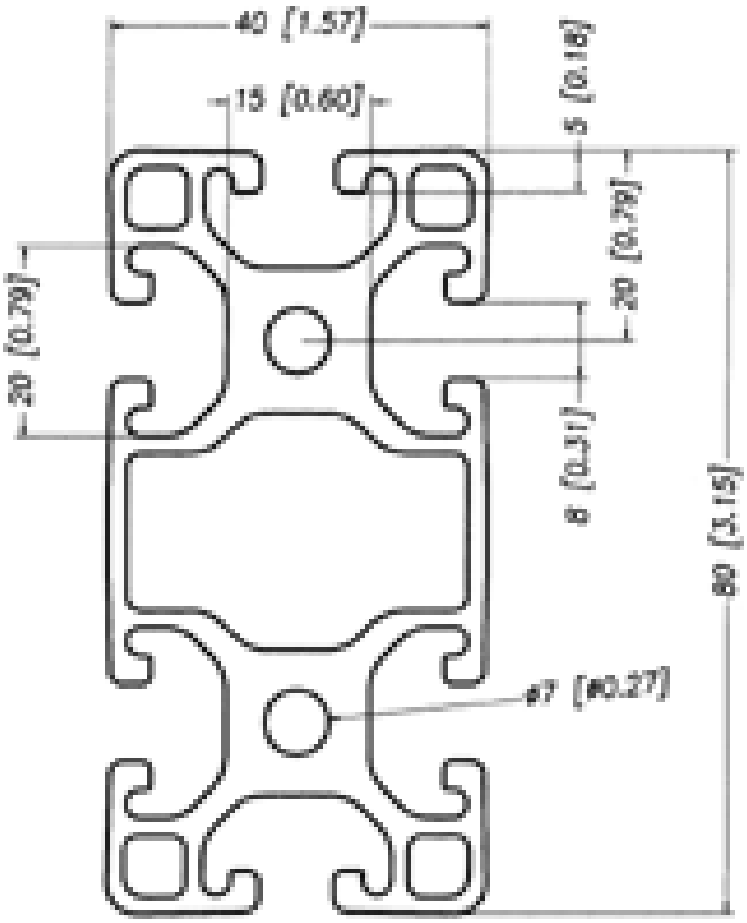

In EXTREN, the function, strength and inertia of this cross section of the actuator must be duplicated though the shape is not critical except that it must attach to the Micron extrusion at either end to complete the replacement and allow the attachment of the rotational mechanism and horn.

EXTREN shapes are shown below.

EXTREN comes in a variety of sizes and shapes which can be found on the internet at the address below.
http://www.strongwell.com/PDFfiles/Extren/Extren%20Brochure%200804.pdf

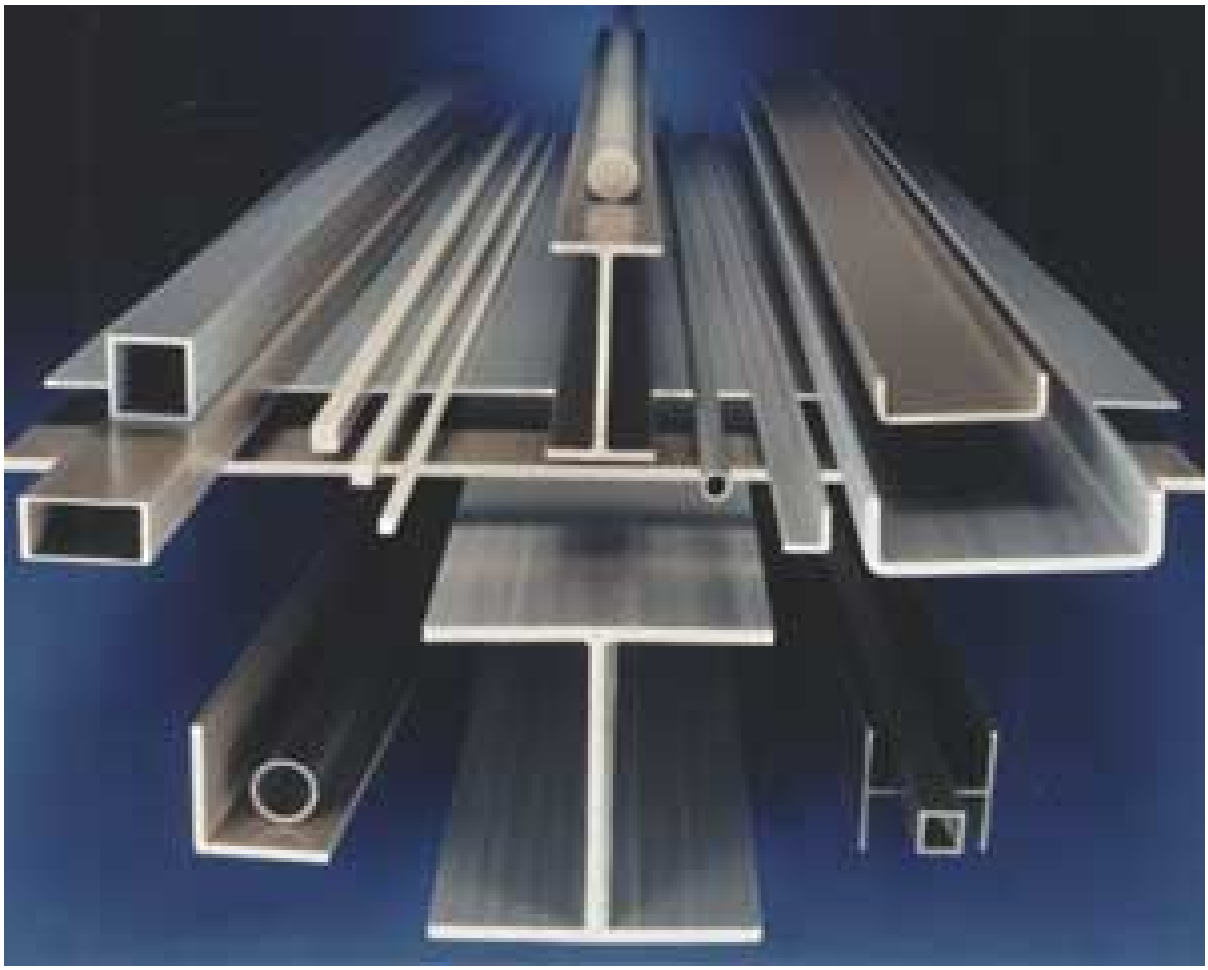

Using a few of the EXTREN shapes shown above a typical cross section is displayed below but other combinations of sections may work better, be stronger or guide better. The final configuration will be determined by the vender.

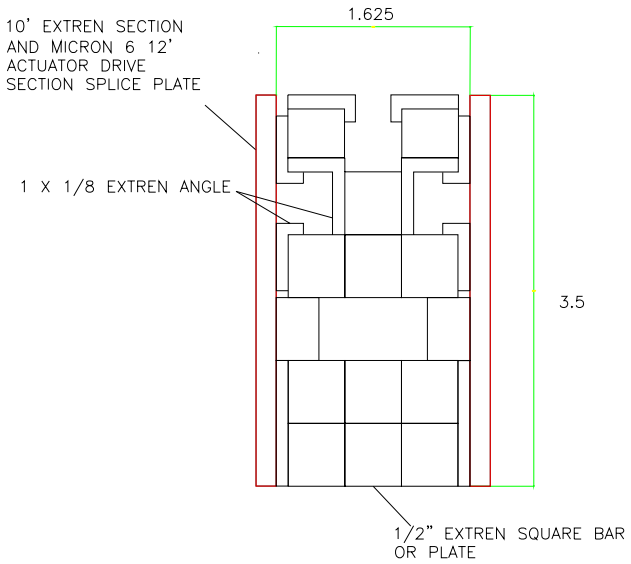

As an example, using other EXTREN shapes one can develop another cross section as shown below.

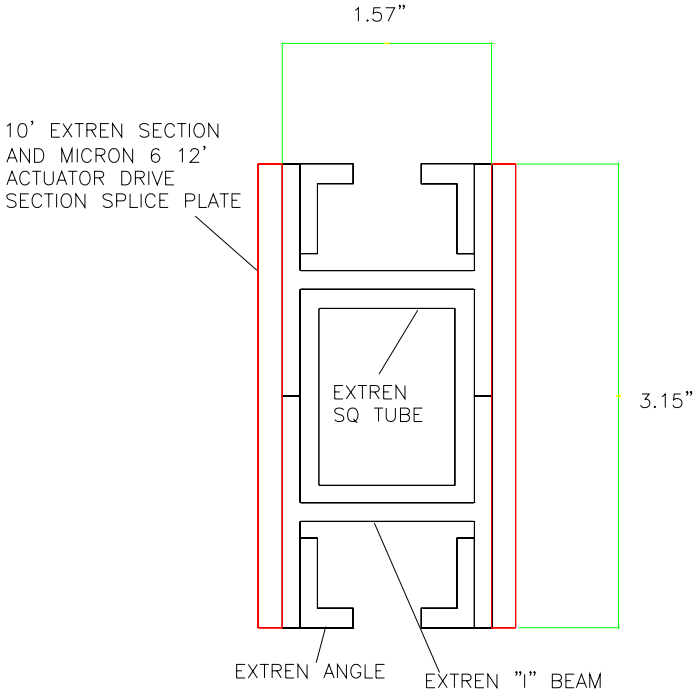

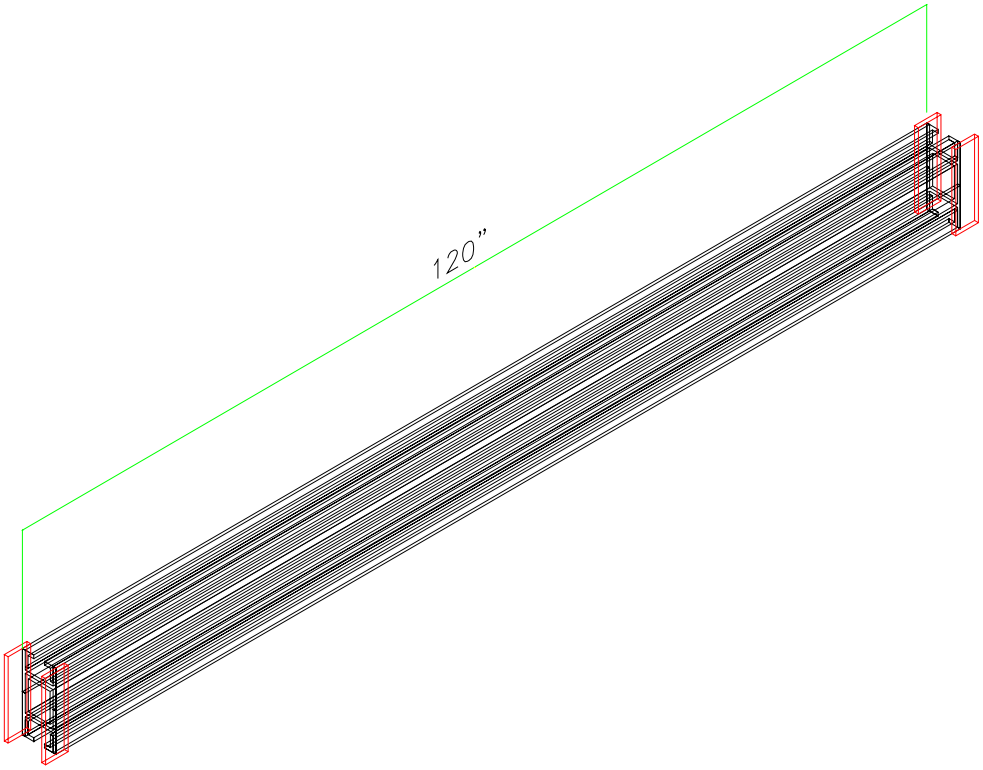

Final assembly details of the manufacturing of this special section are left to the vender but ultimately the ten foot section with splice plates is to attach to the actuator ends so that the entire unit functions within the Macron 6 specifications.