OPERATION AND MAINTENANCE

of

LectroMagnetics "LectroShield"
High-Performance Shielded Enclosures

LectroMagnetics, Inc.
6056 W. Jefferson Boulevard
Los Angeles, California 90016

210A

RF ROOM DOOR O&M INFO

DOOR #	ROOM #
105	
107	
108	
110	
207	
208	
209	
215	

GENERAL INSTRUCTIONS

NORMAL OPERATION

1. ELECTRICAL CONTROL POWER TO DOOR IS "ON"
2. DOOR MAY BE OPENED ONLY AFTER COMPLETE "DEFLATION"
3. DOOR WILL "OPEN" OR "CLOSE" AS LONG AS SELECTOR SWITCH IS HELD IN POSITION.
4. DOOR MAY BE "MANUALLY" OPENED OR CLOSED AND STAY IN ANY POSITION

EMERGENCY OPERATION

1. ELECTRICAL CONTROL POWER TO DOOR IS "OFF"
2. DOOR WILL "CLOSE" OR "UNSEAL"
3. DOOR CAN BE "MANUALLY" OPENED AND WILL "AUTOMATICALLY" CLOSE AFTER 30 SEC. TIME DELAY
4. ELECTRICAL CONTROL POWER TO DOOR "RETURNS"
5. SELECTOR SWITCH TO "DELAIE" TO RESET SYSTEM

REMOVE THRESHOLD COVER AFTER USE AND KEEP OUT OF CLOSING DOOR'S WAY.

DOOR SEQUENCE SCHEDULE

1. Door is deflated at fully closed position .
   a.) Manual switch (button) is operated from either side of door to inflate or "seal" door.

   b.) This can only occur when a 24 VDC signal is present at the outside control panel.

2. Door is closed and sealed.
   a.) Manual switch (button) is operated from either side and door deflates.

   b.) 24 VDC signal is removed from outside control panel, door deflates.

3. Door is deflated at fully closed position.
   a.) Selector switch is turned to open.
      1. Door will move to an open position as long as switch is held "open". Release of switch will stop door travel, with minor "roll on". At fully open position, door will stop and stay at rest, awaiting selector switch movement to "close".

   b.) 24 VDC signal is removed from outside control panel. Door will automatically return to fully closed position. Door will <u>not</u> seal. An adjustable time delay up to 30 seconds will occur before door returns to fully closed.

   c.) Door can be manually moved to open position. (this means cable actuator cylinder must automatically bleed off.)
      1. Door has been manually opened. Selector switch is turned to "close" position. Door will return to closed position as long as switch is held in this position.
      2. Door has been manually opened and 24 VDC signal has been removed prior to opening. Adjustable (up to 30 sec.) delay will occur and door will return to closed position.

1.0 INTRODUCTION

LectroMagnetics, Inc. all-welded shielded enclosures are designed to be inherently maintenance-free to the greatest extent possible. The only maintenance likely to be required will be occasional cleaning of contact surfaces of sliding doors, replacement of worn finger contacts on leaf doors or gaskets on removable panels.

This operation and maintenance manual provides instruction and lists purchased parts that could possibly require replacement over a long term.

2.0 OPERATION OF SLIDING DOORS, MODEL LSW-2001

A reasonably clean and dry source of compressed air at 50 to 100 psig is required to maintain sealing pressure on the sliding doors. This air supply is filtered and regulated to approximately 35 psig inside the control panel located just outside each door.

2.1 Regulated Air Pressure

When installed, the air pressure regulator was adjusted for optimum sealing pressure, normally from 30 to 40 psig. The regulator is intentionally placed in a relatively inaccessibly location inside the control panel and should not be adjusted unless absolutely necessary and only by a responsible individual. Adjustment of pressure above 40 psig may cause permanent deformation and RF leakage. Reduction of pressure below 30 psig may cause partial loss of shielding effectiveness.

2.4 Door Safety Interlock

A cam-operated interlock valve is mounted inside the door "pocket". This valve prevents pressurization of the door unless the door is fully closed. This valve should never be operated manually, since inflation of the door when not properly positioned could cause permanent damage.

2.5 Adjustment for "Centering" Door

Fastened on top of each sliding door are three adjustable rollers (see a). The purpose of these rollers is to center the sliding door between the fixed door frames. This is done by having the two end rollers offset toward one side and the middle roller offset in the opposite direction.

Each roller is adjusted individually and in the following manner: With a 9/16" wrench lossen the three securing bolts sufficiently to allow the roller assembly to slide. It will be obvious which direction the roller is offset. Slide the roller assembly in this direction - toward the fixed track. At this point it may be necessary to apply pressure to the door where it is contacting the frame. With the door in the desired position (not contacting the frame), firmly tighten all three securing bolts.

This is repeated for the remaining two in the same manner.

3.0 MAINTENANCE, SLIDING DOOR, MODEL LSW-20,001

No routine maintenance is normally required for the sliding doors.

3.1 The contact surfaces on the inner face of the door leaf and outer face of the door frame must be kept free of any contaminating material that would insulate or damage the plated surfaces. Particular care should be taken to avoid contamination by paint, oil, or any petroleum-based products, or wax. To remove such contamination, use a non-petroleum-based solvent and soft cloth. Recommended solvents include trichlorethylene, alcohol, acetone, or clean lacquer thinner. Do Not use paint thinner.

3.2 As the door is used, the tin-coated edges will develop some bright marks in the direction of travel. These are not a cause for alarm. Repairs are not necessary unless rust begins to show in the marked area.

3.3 If repairs are required, clean the area affected with toluene and apply a thin coat of Emerson-Cuming RVS conductive silver adhesive to the scratch with a brush.

3.4 If the door should consistently develop scratches across the painted area of the panel, it is usually caused by opening the door before the inflatable seal is fully exhausted, or by the operator leaning on the door while it is being opened.

4.0 REMOVABLE PANELS

LectroMagnetics, Inc. shielded removable panels for high-performance, all-welded enclosures are designed to be inherently maintenance free, except for gasket replacement, when gasket is used. Panels are secured in place with 3/8" bolts. When handling the panel, care must be taken to avoid dirt or grease on the contact areas. It is advisable to use clean gloves, both from a safety and cleanliness standpoint.

The RF gasket attached to the frame should be replaced if permanently compressed or torn. When cutting gasket, always cut on 45 degree angles. Additional gasket may be ordered if needed, from LectroMagnetics, Inc.

PNEUMATIC CONTROL
DOOR 105, 107, 108
208 & 215

BE&C ENGINEERS INC.
625 Andover Park West
Tukwila, Washington 98188

PROJECT NRL PHASE II JOB NO.

F BY MALLOTT CHECKED BY DATE 3-3-82 SHEET 1 OF

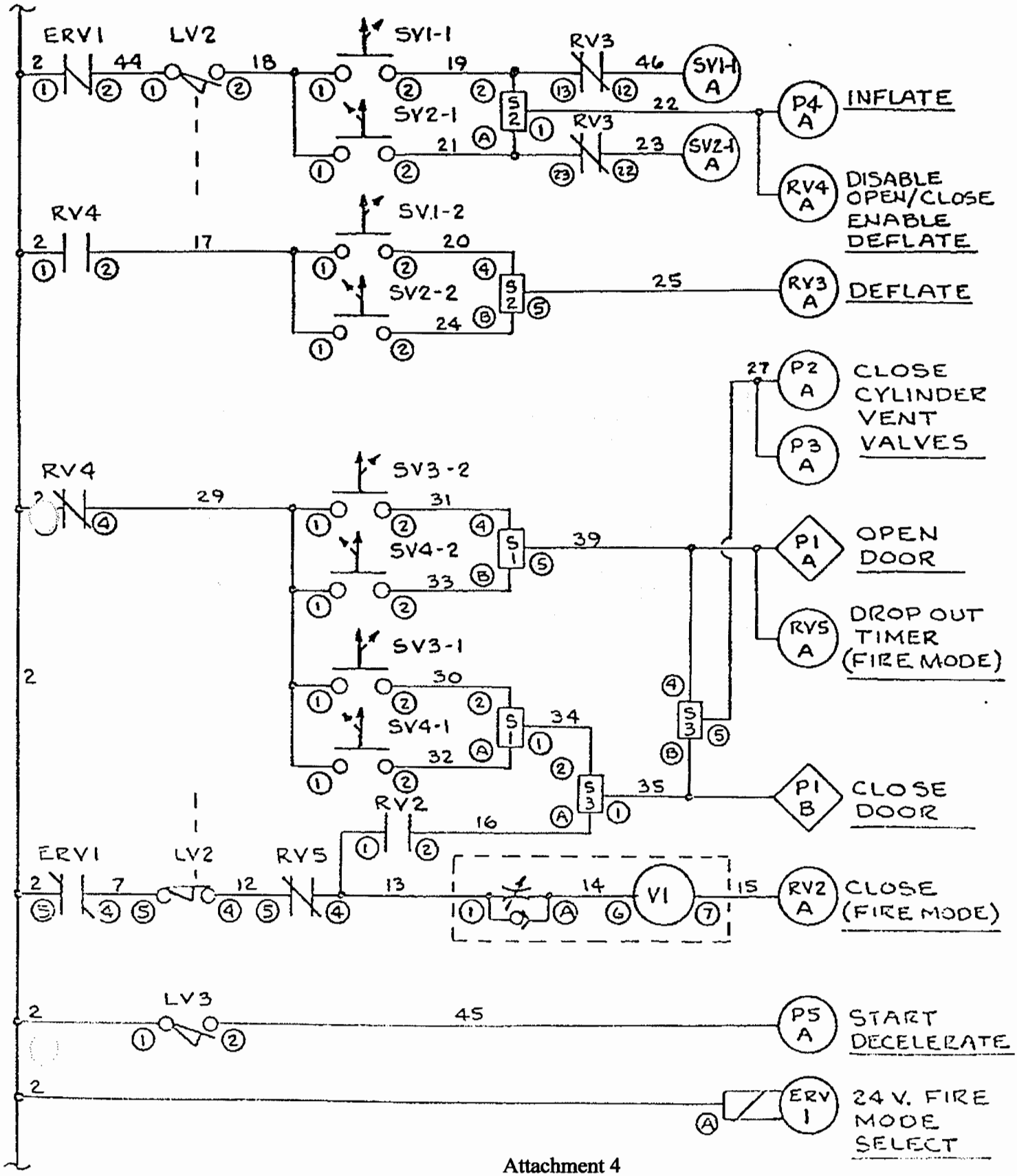

PNEUMATIC CONTROL
DOOR 110

BE&C ENGINEERS INC. 625 Andover Park West Tukwila, Washington 98188

PROJECT NRL PHASE II JOB NO.

BY MALLOTT CHECKED BY DATE 3-3-82 SHEET 2 OF

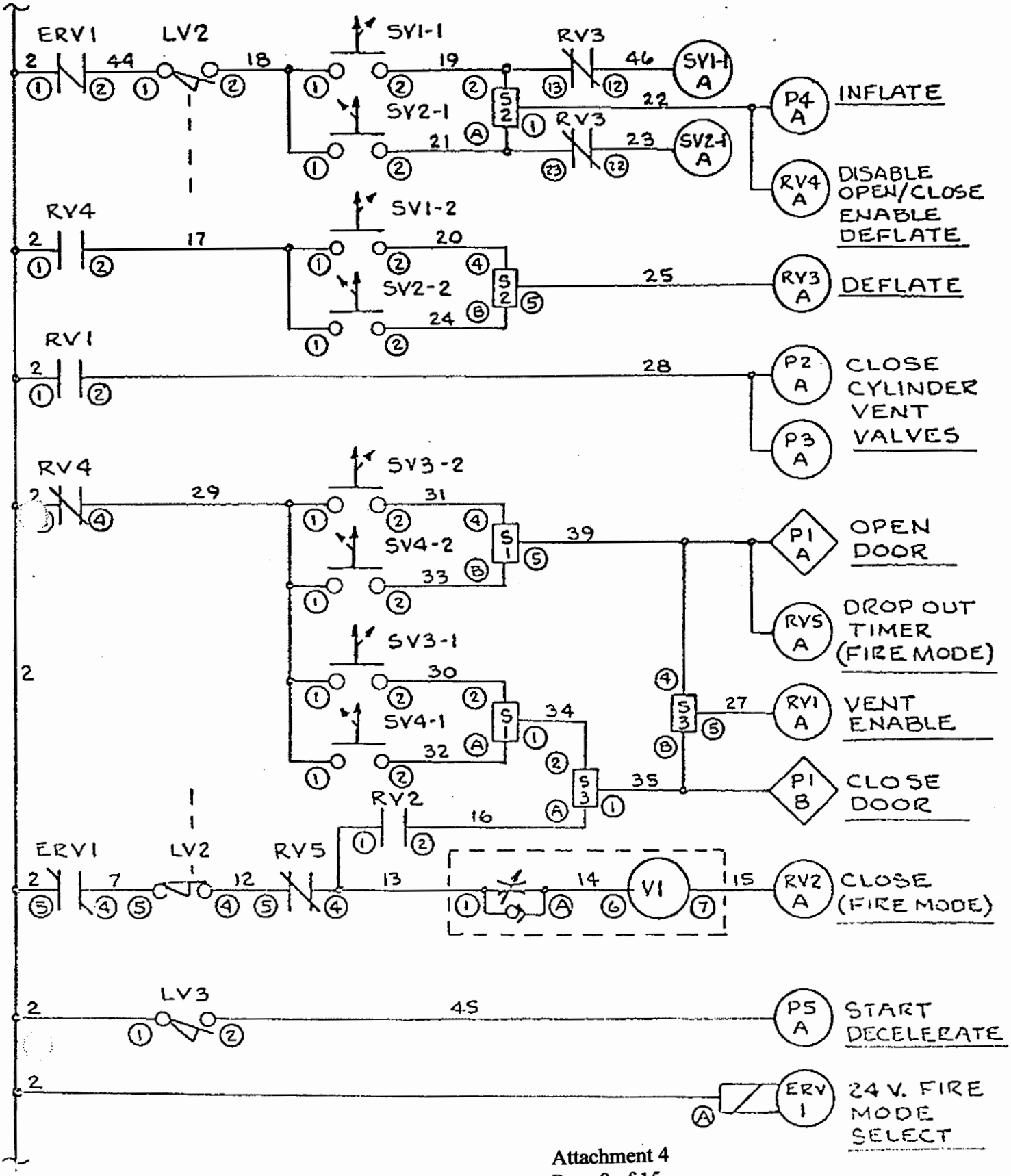

PNEUMATIC CONTROL
DOOR 207

BE&C ENGINEERS INC. 625 Andover Park West Tukwila, Washington 98188

PROJECT NRL PHASE II JOB NO.

BY MALLOTT CHECKED BY DATE 3-3-82 SHEET 4 OF

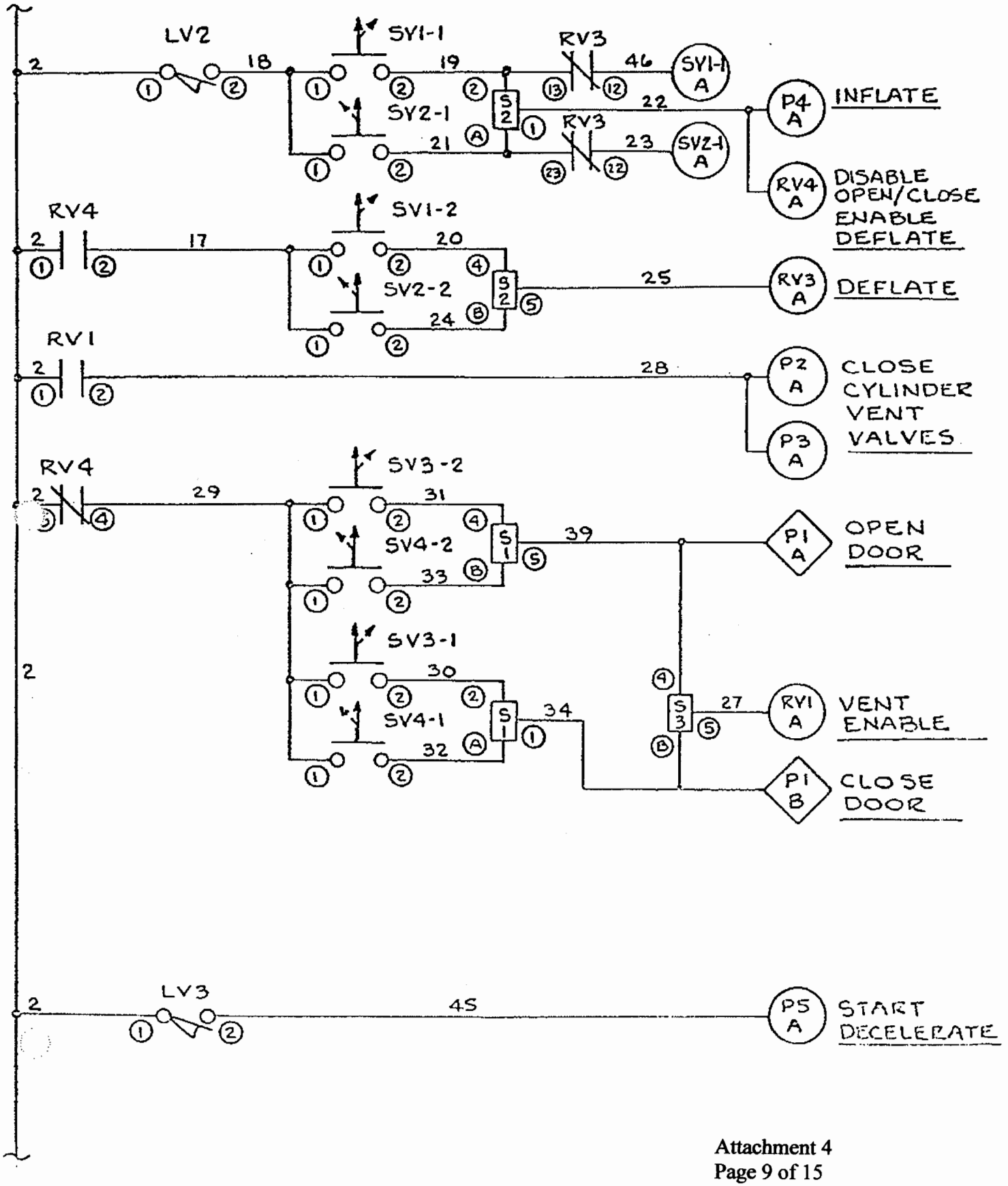

PNEUMATIC CONTROL
DOOR 209

BE&C ENGINEERS INC. 625 Andover Park West Tukwila, Washington 98188

PROJECT NRL PHASE II JOB NO.

BY MALLOTT CHECKED BY DATE 3-3-82 SHEET 3 OF

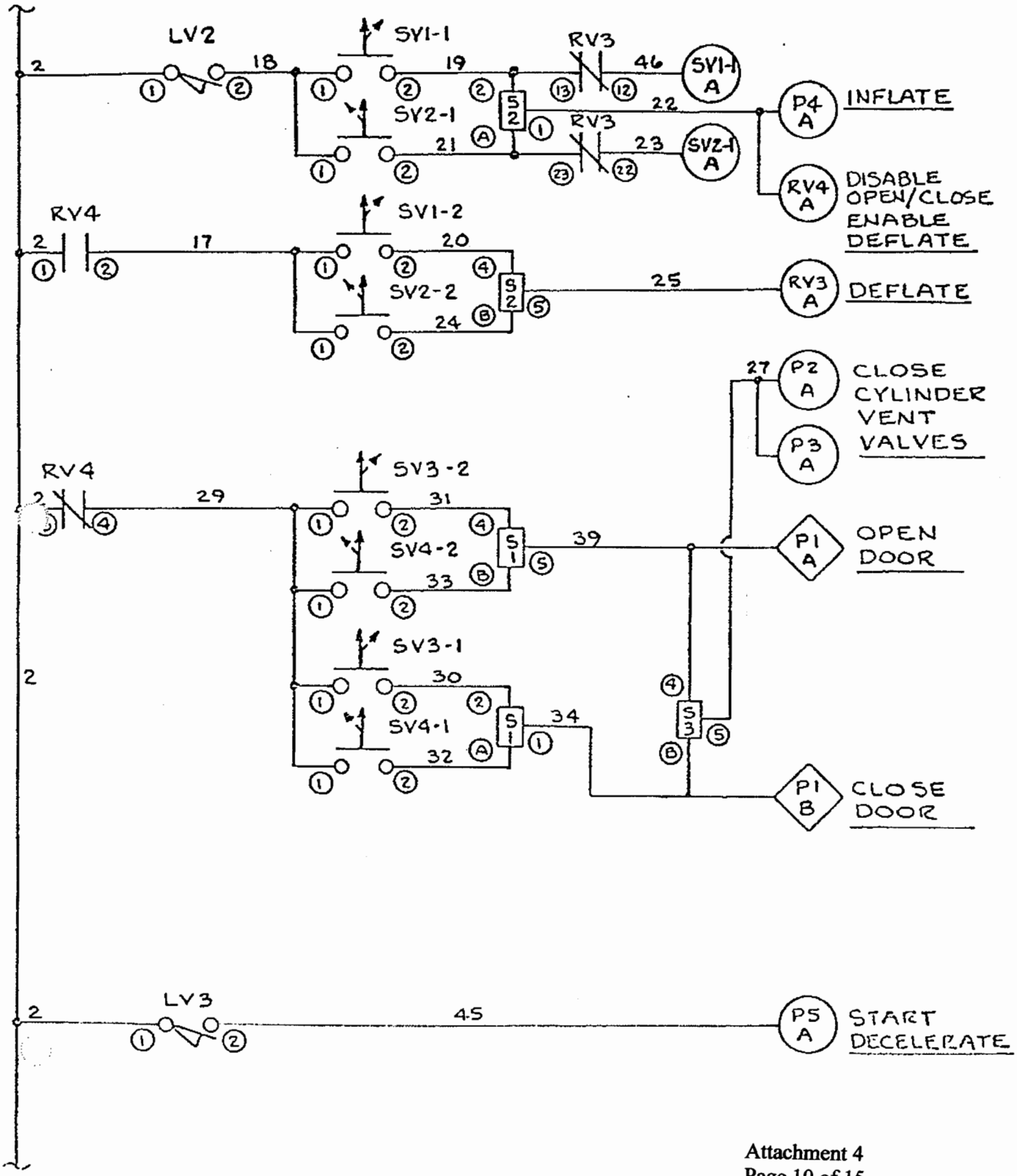

WIRING DIAGRAM

BE&C ENGINEERS INC. 625 Andover Park West Tukwila, Washington 98188

PROJECT NRL PHASE II JOB NO.

FIG. BY MALLOTT CHECKED BY DATE 3-3-82 SHEET 5 OF

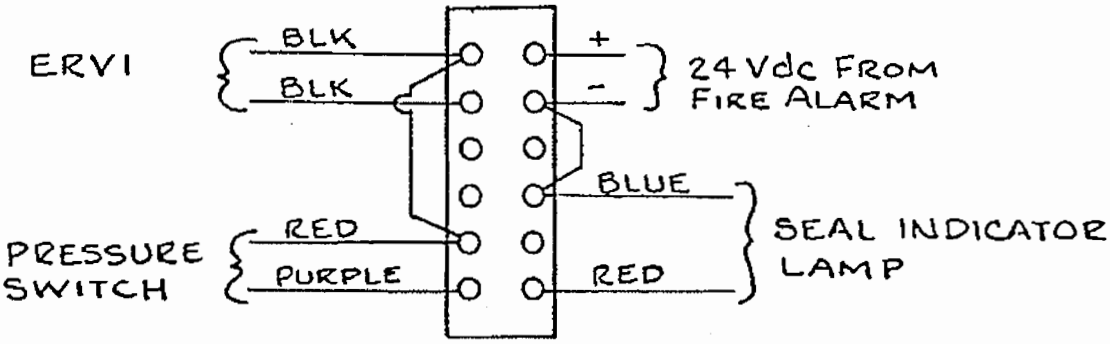

LTR	REVISION DESCRIPTION	DATE	APP'D
A	1. REVISED ALL SHTS. #1 THRU #23 PER APPROVED PRINTS	13 JUL 81	
	2. DOOR Nº 312 CANCELLED		
D	AS BUILT SHEETS #2 1/2		

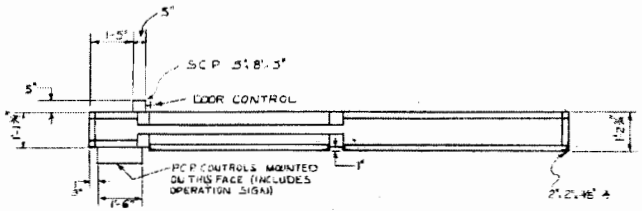

PLAN VIEW

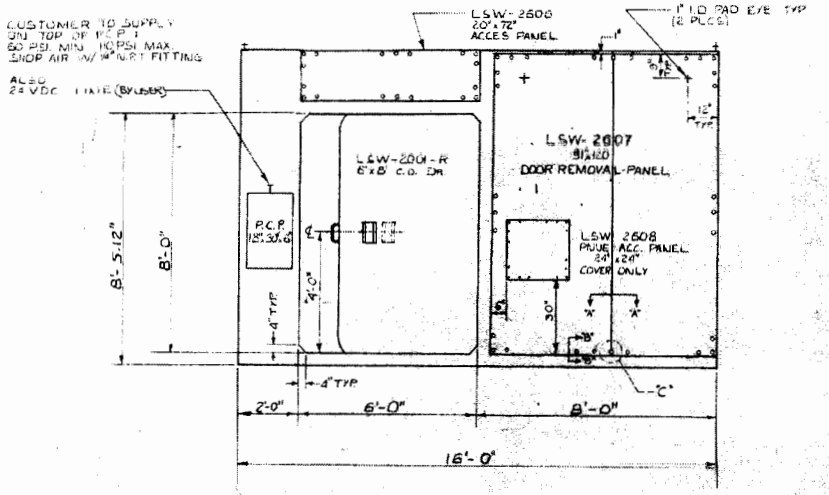

FRONT VIEW

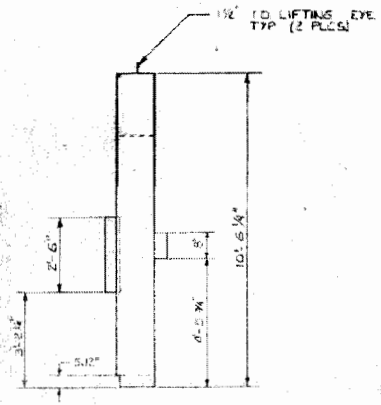

END VIEW

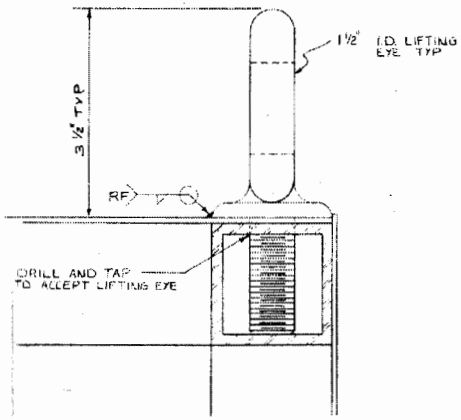

TYP LIFTING EYE DETAIL
SCALE: 1/4"=1"

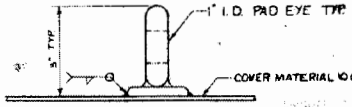

TYP PAD EYE DETAIL
(SCALE: 1/2"=1")

NOTES:

1. MATERIAL TO BE H.S.A. (A36) H.R.S. C-1010
2. DOOR FRAMES TO BE 5"x5"x3/8" STL. TUBE
3. L.S.W. TO FURNISH COMPLETE DOOR POCKET AS SHOWN
4. L.S.W. TO PROVIDE 1-3 1/4"x5'-10"x10 GA. THRESHOLD COVER
5. REFER TO DOOR SEQUENCE SCHEDULE
6. P.C.P. = PRIMARY CONTROL PANEL 18"x30"x6"
7. S.C.P. = SECONDARY CONTROL PANEL 5"x8"x5"
8. DOOR HANDLE LOCATIONS ARE TYP FOR ALL DOORS AND SHOWN ON THIS DWG. ONLY
9. SECTIONS "X" & "Z" THIS SHEET REFER TO ALL DOORS
10. PLAN VIEW DIMS. ARE SHOWN WITH OUT 11 GA SHT. REFER TO SECTS. OF POCKET FOR OVERALL DIMS

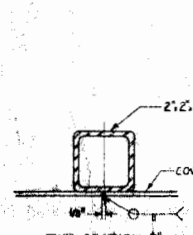

TYP SECTION "X"
SCALE: 1/2"=1"

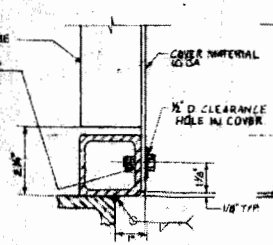

TYP SECTION "B"
SCALE: 1/2"=1"

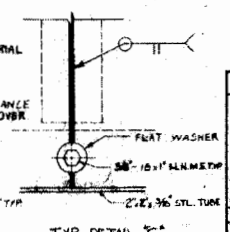

TYP DETAIL "C"
SCALE: 1/2"=1"

REF.	QTY.	PART NUMBER	DESCRIPTION/MATERIAL	SPECIFICATIONS/VENDOR/NOTES	ITEM NO.

SIGNATURES	DATE
DRAWN NEP	8 APRIL 81
CHECKED	
APPROVED	
APPROVED	

UNLESS OTHERWISE SPECIFIED
TOLERANCES
DECIMALS .XX ± .02 .XXX ±.005
FRACTIONS ± 1/64 1/4
ANGLES ± 1°

2615
SIGNATURE ASSEMBLY PRODUCTION

LectroMagnetics Inc.
6060 West Jefferson Blvd. Los Angeles, California 90016 (213) 870-8383

NRL - BOEING
WASHINGTON D.C.
PLAN and ELEVATIONS . 6'x8' c.o. Dr # 105

CONTRACT NO. 29098
DWG. NO. LSW-1259-2615
REV. D
SCALE 1/4"=1'-0"
SHEET 1 of 26

Attachment 4
Page 12 of 15

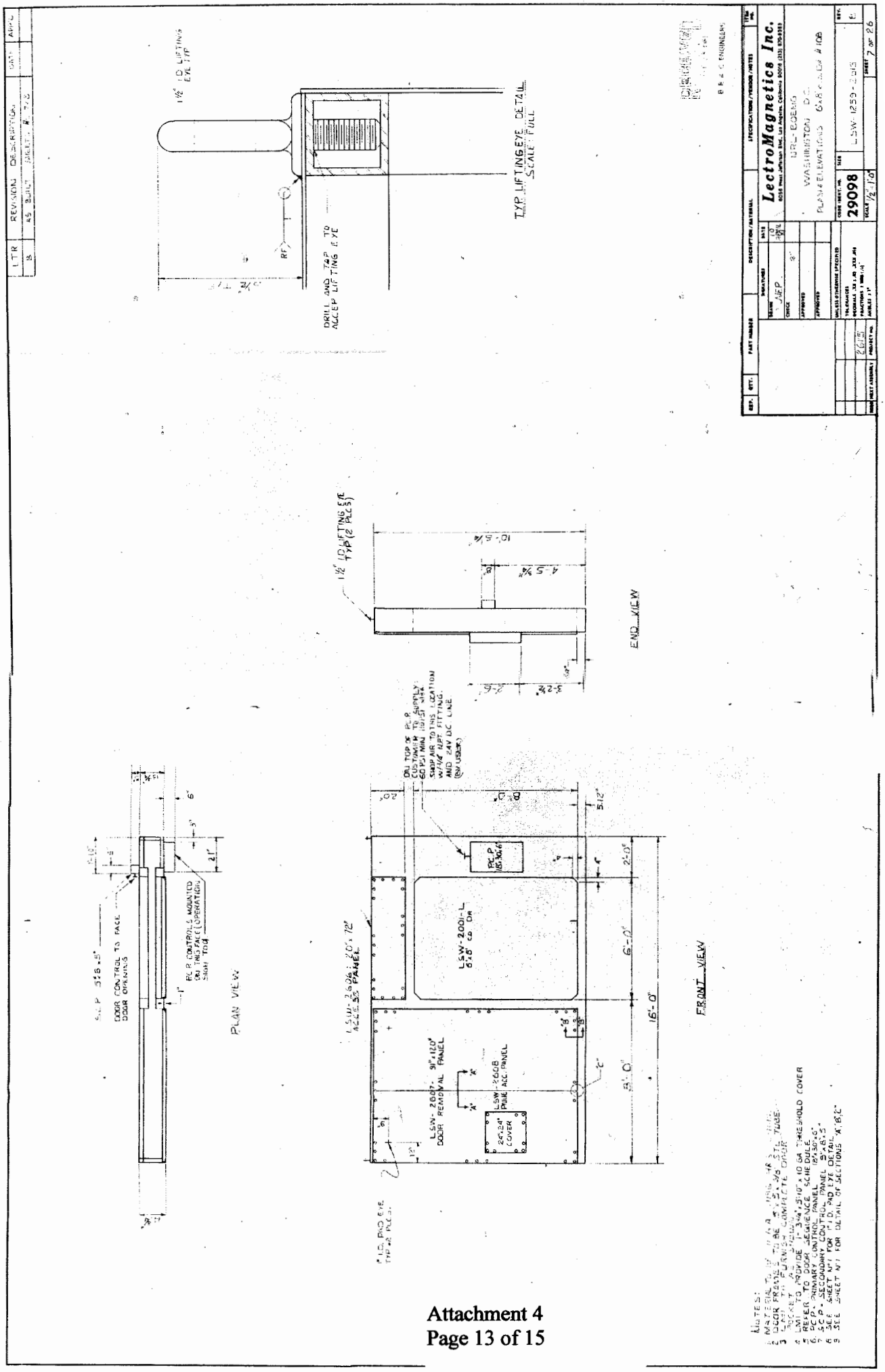
LTR
REVISION DESCRIPTION
DATE
APPD
TYP LIFTING EYE DETAIL
SCALE: FULL
DRILL AND TAP TO ACCEP LIFTING EYE
END VIEW
PLAN VIEW
FRONT VIEW
DOOR CONTROL TO FACE DOOR OPENING
LSW-2001-L
LSW-2607-91"x120" DOOR REMOVAL PANEL
LSW-2608 PONE ACC. PANEL
24"x24" COVER
16'-0"
6'-0"
3'-0"
2'-0"
LectroMagnetics Inc.
NRL-BOEING
WASHINGTON D.C.
PLAN & ELEVATIONS
29098
LSW-1259-2615
SHEET 7 OF 26

NOTE:
1. SWITCH ACTUATION TO CORRESPOND TO TRAVEL OF DOOR
2. INFLATE TO CORRESPOND TO CLOSE.

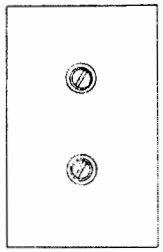

OUTSIDE OF SCP

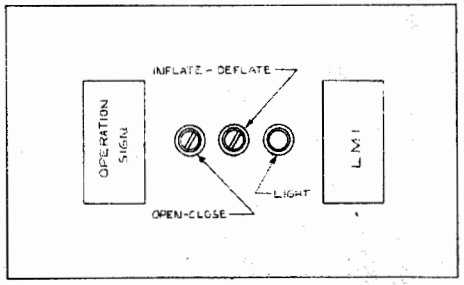

OUTSIDE OF CONTROL BOX PCP

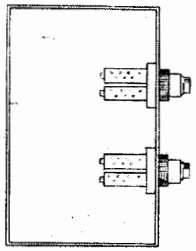

SIDE VIEW OF INSIDE SCP

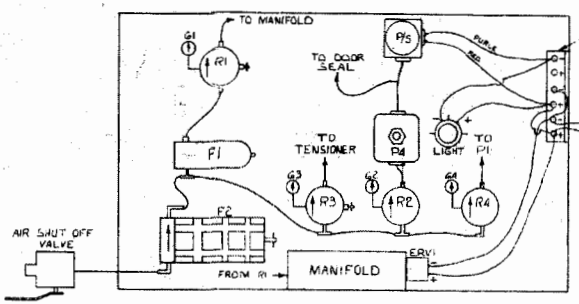

NOTE:
ALL VALVES NOT SHOWN TO BE LOCATED NEAR THEIR DESTINATION

INSIDE OF CONTROL BOX PCP

REF	QTY	PART NUMBER	DESCRIPTION	VENDOR / NOTES
70				
69				
68				
67				
66				
65				
64				
63				
62				
61				
60				
59				
58				
57				
56				
55				
54				
53				
52				
51				
50				
49				
48				
47				
46				
45				
44				
43				
42				
41				
40				
39				
38				
37				
36				
35				
34				
33				
32				
31				
30				
29				
28				
27	1	M-6	6 POST TERMINAL BLOCK	CURTIS OR EQUAL
26	1	DIH-ABQ	PRESSURE SWITCH	BARKSDALE CONTROL
25	1	3001 KP34	LIGHT ON P.C.P. COVER	SQ. D
24	1	QE-4	QUICK EXHAUST	HUMPHREY
23	1	LSH-1	RV4 RELAY	DYNAMCO
22	2	MSH-1	RV3 RELAY	
21	4	R35311	SV1,2,3,4 SELECTOR	
20	1	VC1	V1 VOLUME CHAMBERS	
19	1	FCP-3	TD1 VALVE	
18	2	LSH-1	RV5, RV2 RELAY	
17	2	L24F-1	ERV-1 VALVE	
16	6	OR-1	S1,2,3,4,5,6 SHUTTLE	
15	2	HDL30 W/SQ1 LEVER	LV2, LV3 LIMIT VALVE	
14	2	MDA-1	RV1 RELAY	DYNAMCO
13				
12	1	NVSA-4324-01N	P1 VALVE	SMC
11	4	NVSA-3125-02N	P2,P3,P4,P5 VALVE	SMC
10	3	PS 3500-02	FC1, FC2, FC3 FLOW CONTROL	SMC
9				
8	2	13,536	MTG. KIT FOR R1, R3	MONNIER BROS. INC
7	2	13,524	G1, G3 GAUGE	
6	2	101-3000-2	R1, R3 REGULATOR	
5	2	11,520	MTG. KIT FOR R2, R4	
4	2	11,528	G2, G4 GAUGE	
3	2	104-1000-2	R2, R4 REGULATOR	
2	1	204-1100-2	F2 PRIMARY FILTER	
1	1	204-3099-2	F1 FILTER	MONNIER BROS. INC

LectroMagnetics Inc.
6056 West Jefferson Blvd., Los Angeles, California 90016 (213) 870-6263

SIGNATURES	DATE
DRAWN NEP	10 JUNE 87
CHECK	
APPROVED	

NRL-BOEING
WASHINGTON - D.C.
BILL OF MATERIALS OF PNUEMATIC

CODE IDENT NO.	SIZE		REV
29098	D	LSW-1259-2615	B

PROJECT 2615 SCALE NONE SHEET 26 OF 26

LTR	REVISION DESCRIPTION	APPR.	DATE
B	REVISED AND REISSUED		
A	REVISED PER APPR. DRAWING		

Attachment 4
Page 14 of 15

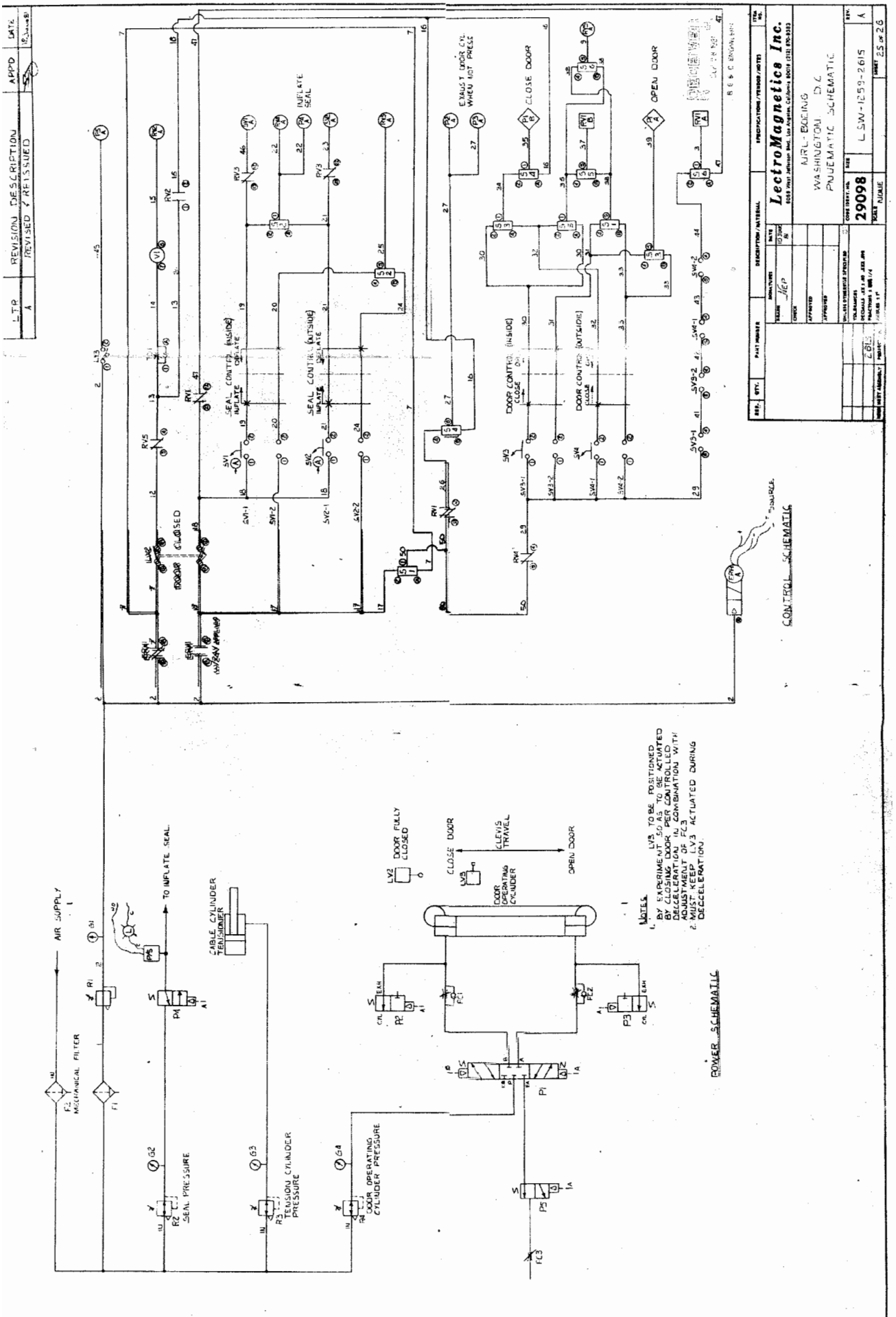
LTR
REVISION DESCRIPTION
A
REVISED & REISSUED
APP'D
DATE
LectroMagnetics Inc.
NRL-BOEING
WASHINGTON, D.C.
PNUEMATIC SCHEMATIC
29098
LSW-1259-2615
25 OF 26
CONTROL SCHEMATIC
POWER SCHEMATIC
AIR SUPPLY
MECHANICAL FILTER
TO INFLATE SEAL
CABLE CYLINDER TENSIONER
SEAL PRESSURE
TENSION CYLINDER PRESSURE
DOOR OPERATING CYLINDER PRESSURE
DOOR FULLY CLOSED
CLOSE DOOR
CLEVIS TRAVEL
OPEN DOOR
DOOR OPERATING CYLINDER
INFLATE SEAL
EXAUST DOOR CYL WHEN NOT PRESS
CLOSE DOOR
OPEN DOOR
SEAL CONTROL (INSIDE)
SEAL CONTROL (OUTSIDE)
DOOR CONTROL (INSIDE)
DOOR CONTROL (OUTSIDE)
DOOR CLOSED
NOTES
1. LV3 TO BE POSITIONED BY EXPERIMENT SO AS TO BE ACTUATED BY CLOSING DOOR PER CONTROLLED DECCELERATION IN COMBINATION WITH ADJUSTMENT OF FC3
2. MUST KEEP LV3 ACTUATED DURING DECCELERATION.