ATTACHMENT I

NAVAL RESEARCH LABORATORY

NAVAL CENTER FOR SPACE TECHNOLOGY

Deployable Solar Array Product Specification
for the
Standard Bus Program

NCST-S-SB003 **8 JUNE 2006**

DISTRIBUTION STATEMENT C: Distribution authorized to U.S. Government agencies and their contractors; Administrative or Operational Use. Other requests for the document shall be referred to Commander, U.S. Naval Research Laboratory, 4555 Overlook Avenue, S.W., Washington, D.C., 20375-5000.

4555 Overlook Avenue, S.W.
Washington, D.C. 20375

RECORD OF CHANGES

REVISION LETTER	DATE	TITLE OR BRIEF DESCRIPTION	ENTERED BY
—	1 APRIL 2006	Draft	Paul Oppenheimer
A	8 APRIL 2006	QA Section Updates	Paul Oppenheimer

Table of Contents

1 SCOPE 7
1.1 Identification 7
1.2 Application 7
1.3 Delivery 7
1.3.1 Turn Key Solar Array System 7
1.4 Design Reviews 7
1.4.1 Preliminary Design Review 8
1.4.2 Critical Design Review 8
1.4.3 Production Readiness Review 8
1.5 Monthly Reports 8
2 APPLICABLE DOCUMENTS 9
2.1 Government Documents 9
2.1.1 Military Specifications 9
2.1.2 Military Standards 9
2.1.3 Military Handbooks 10
2.1.4 Other Publications 10
2.1.5 Non-Government Documents 10
2.1.6 Drawings 10
2.1.7 Order of Precedence 10
3 Performance Requirements 11
3.1 Overall Requirements 11
3.1.1 Mission Events 11
3.1.2 Mission Orbit 12
3.1.3 Operations 12
3.1.4 Design Life 12
3.2 Physical Characteristics 12
3.2.1 Co-ordinate system 12
3.2.2 Stowed Envelope 13
3.2.3 Deployed Envelope 13
3.2.4 Alignment 13
3.2.5 Substrate 14
3.2.6 Subsystem Mass 14
3.3 Electrical Performance 14
3.3.1 Power Output 14
3.3.2 Electrical Continuity and Grounding 16
3.3.3 Magnetic Moment Cancellation 17
3.4 Structural Performance 18
3.4.1 Stiffness 18
3.4.2 Stowed Configuration 18
3.4.3 Deployed Configuration 18
3.5 Solar Array Deployment 18
3.5.1 Deployment Commanding 18
3.5.2 Deployment Temperatures 18
3.5.3 Yoke 18

3.5.4 Restraint Mechanism Assembly 19
3.5.5 Deployment Kinematics 19
3.6 Thermal Performance 20
3.7 Instrumentation 20
3.7.1 Deployment indicator 20
3.7.2 Temperature Sensors 20
3.7.3 Sun Sensors 20
3.8 Transportability 20
3.9 Maintainability 20
4 Design Requirements 21
4.1 Non-Operating Environment 21
4.1.1 Acceleration 21
4.1.2 Random Vibrations 21
4.1.3 Sine Survey 22
4.1.4 Acoustic 22
4.1.5 Pressure 23
4.1.6 Humidity 23
4.1.7 Pyrotechnic Shock 23
4.2 Operating Environment 23
4.2.1 Temperature 23
4.2.2 Pressure 23
4.2.3 Humidity 23
4.2.4 Radiation 24
4.2.5 Corona Suppression 24
4.2.6 Electrostatic Discharge 24
4.3 Design and Construction 24
4.3.1 Materials Selection 24
4.3.2 Adhesives 25
4.3.3 Parts Selection 25
4.3.4 Soldering and Other Processes 26
4.3.5 Electrostatic Discharge Sensitive Parts 26
4.3.6 Grounding and Shielding 26
4.3.7 Finishes 26
4.3.8 Nameplates and Product Marking 27
4.4 Reliability 27
4.4.1 Single Point Failures 27
4.4.2 Failure Modes, Effects, and Criticality Analysis 27
4.4.3 Electrical Parts Stress Analysis 27
4.4.4 Failure Reporting and Corrective Action System 27
4.4.5 Non-Conformance Reporting 27
4.4.6 Workmanship 28
5 Interface Definition 28
5.1 Structural/Mechanical Interfaces 28
5.1.1 Physical 28
5.1.2 SADA Interface - Deployed Configuration 29
5.1.3 Yoke 29

5.2 Thermal Interface 30
5.2.1 Stowed Configuration 30
5.2.2 Deployed Configuration 30
5.2.3 Spacecraft Sidewall 30
5.2.4 Restraint Hardware 30
5.3 Electrical Interfaces 30
5.3.1 Solar Array Drive Assembly (SADA) 30
5.3.2 Deployment Heaters & Deployment Thermistors 31
5.3.3 Release Mechanism(s) 31
5.3.4 Thermistors 31
5.3.5 Coarse Sun Sensors 31
5.3.6 Deployment Indicators 31
6 Documentation 32
6.1 Parts List 32
6.2 Flight Solar Array Drawings 32
6.3 Flight Solar Array Deployment Manual 32
6.4 Flight Solar Array Test Report 32
6.5 Non-Conformance Report 32
6.6 Status Reports 32
6.7 Final Report 32
6.8 Drawings / Configuration Control 33
6.8.1 Documentation Changes 33
7 QUALITY ASSURANCE (QA) PROVISIONS 34
7.1 General 34
7.1.1 Responsibility for Tests 34
7.1.2 Verification Methods 34
7.2 Quality Conformance 35
7.2.1 Test Approach 35
7.2.2 Ambient Conditions 36
7.2.3 Cleanliness Requirements 36
7.2.4 Solar Array Tests 36
7.2.5 Test Description 37
7.3 Verification Requirements Checklist 41
7.3.1 Surveys, Audits, and Inspections 41
7.4 Pre-Delivery Inspection 41
8 PREPARATION FOR DELIVERY 45
8.1 General 45
8.2 Special Requirements 45
8.2.1 Special Instructions 45
8.2.2 Electrical Connectors 45
8.3 Detailed Preparation 45
8.3.1 Preservation and Packaging 45
8.3.2 Packing 46
8.3.3 Method of Shipment 47
9 NOTES 47
9.1 Definitions 47

9.1.1 Supplier 47
9.1.2 Procuring Activity 47
9.1.3 User 47
9.1.4 Flight Hardware 47
9.1.5 Interchangeable Items 48
9.1.6 Replacement Item 48
9.1.7 Part 48
9.1.8 Device 48
9.1.9 Component 48
9.1.10 Cycle 48
9.2 Deviations 48
9.3 Acronyms and Abbreviations 49

List of Figures

Figure 1: Spacecraft Coordinate System 12
Figure 2: Solar Array Stowed Envelope – Top View (all dimensions in inches) 13
Figure 3: Minimum Yoke Length 19
Figure 4: Snubber and Restraint Mechanism Footprint (all dimension in inches) 29
Figure 5: Protoflight Thermal Vacuum Profile 39

List of Tables

Table 1: Standard Bus Mission Phases 11
Table 2: Maximum Moments of Inertia Per Wing 14
Table 3: Deployed Natural Frequency 18
Table 4: Random Vibration Test Levels 21
Table 5: Spacecraft Protoflight Acoustic Test Levels 22
Table 6: Light Band Seperation Shock 23
Table 7: Charged Particle Radiation 24
Table 8: SADA Rings Capabilities (TBR) 30

1 SCOPE

1.1 Identification

This specification establishes the manufacturing, performance, design, development, test, and delivery requirements for space deployable solar panel assemblies including a release assembly to restrain the arrays during launch.

1.2 Application

This document is applicable to solar arrays used in a space environment. It is specifically intended to be used for solar arrays that are to be integrated with a Navy spacecraft at the Naval Research Laboratory (NRL) in Washington, D.C.

1.3 Delivery

The contractor shall deliver a turn key solar array system that will attach to the spacecraft bus and to the solar array drive assembly through a contractor developed yoke. The contractor shall deliver any handling fixtures required for removal from shipping containers and integration to the spacecraft. The contractor shall deliver a protective cover to shield exposed hardware during ground testing and integration of the spacecraft. The contractor shall deliver any alignment tools required for installation of the arrays to the spacecraft. The contractor shall deliver 10 spare solar cells to replace any damaged cells post delivery to the procuring activity.

If the option is exercised, the contractor shall deliver all hardware necessary to perform full solar array deployment when mounted to the spacecraft at the procuring activity's' facilities. This shall include any gravity offloading methods (i.e. air bearings or offloading fixtures).

1.3.1 Turn Key Solar Array System

A turn key solar array system includes but is not limited to: solar cells, coverglass, interconnects, and interconnects bonded to the substrate; hinges; release mechanisms; yoke; snubbers; harness; etc.

1.4 Design Reviews

The contractor shall hold three reviews at their facility for the purpose of reviewing proposed designs and establishing critical schedules.

1.4.1 Preliminary Design Review

The contractor shall arrange a preliminary design review (PDR) within 2 months of contract awarding. The procuring activity will have representatives present at the review.

1.4.2 Critical Design Review

The contractor shall arrange a critical design review (CDR) within 5 months of contract awarding. The procuring activity will have representatives present at the review.

1.4.3 Production Readiness Review

The contractor shall arrange a production readiness review prior to the application of flight solar cells to the substrates. A review package of the final assembly drawings, test results and schedule must be available at the review. Within two weeks of the final review, open action items must be closed with concurrence of the procuring agency prior to delivery of flight solar arrays.

1.5 Monthly Reports

The contractor shall provide monthly technical status reports beginning 45 days after receipt of order (ARO). The technical reports shall present a concise and factual description of technical findings and accomplishments during the reporting period. The reports must include, but are not limited to:

- Description of progress during the reporting period supported by the reasons for any change in approach reported previously.
- Notification of any change in key personnel associated with the contract during the reporting period.
- Summary of substantive information derived from noteworthy trips, meetings, visits, and briefings held in connections with the contract during the reporting period.
- Technical problems, general methodology, technical results, important findings, conclusions, significant hardware development, and any special comments.
- Summary of any problems or areas of concern of which Government guidance is desired
- Statement relative to any anticipated deviation in the contractor's planned effort to achieve the objective of the contract.

2 APPLICABLE DOCUMENTS

2.1 Government Documents

The following documents of the exact issue shown form a part of this document to the extent specified herein. In the event of conflict between the documents referenced herein and the contents of this document, the contents of this document shall be considered a superseding requirement. Copies of specifications, standards, drawings, and publications required by suppliers in connection with specified procurement functions should be obtained from the contracting agency or as directed by the contracting officer. Documents beginning with the control number "SB" and "NCST" are program documents controlled by the Naval Research Laboratory (NRL).

2.1.1 Military Specifications

Number	Title	Reference
MIL-A-83377 (Cancelled)	Adhesive Bonding (Structural) For Aerospace and Other Systems, Requirements For	
MIL-Q-9858A (Cancelled)	Quality Program Requirements, 23 July 1993	

2.1.2 Military Standards

Number	Title	Reference
AFSPCMAN91-710	Range Safety User Requirements Manual	
MIL-STD-129L	Military Marking for Shipment and Storage	
MIL-STD-464	Electromagnetic Environmental Effects Requirements for Systems	
MIL-STD-1367 (Canceled)	Packaging, Handling, Storage, and Transportability Program Requirements for Systems and Equipments (no S/S document)	
MIL-STD-1535A (Canceled)	Supplier Quality Assurance Program Requirements	
MIL-STD-1540D	Product Verification Requirements for, Launch, Upper Stage, and Space Vehicles	
MIL-STD-1520C	Corrective Action and Disposition System for Nonconforming Materials	

2.1.3 Military Handbooks

Not Applicable.

2.1.4 Other Publications

Number	Title	Reference
J-STD-004	Soldering Fluxes, Requirements for	
NASA SP-R-0022	General Specification, Vacuum Stability Requirements of Polymeric Material for Spacecraft Application)	
MSFC-STD-3029	Selection of Metallic Materials for Stress Corrosion Cracking Resistance in Sodium Chloride Environments	
NCST-D-SB003	Mission Assurance Plan	

2.1.5 Non-Government Documents

Not applicable.

2.1.6 Drawings

The top assembly drawing of the solar array assembly should be numbered as follows:

Number	Title	Reference
SB-XX-XXX (TBD)	Solar Array Assembly	

2.1.7 Order of Precedence

In the event of a conflict between the text of this specification and the references cited herein, the text of this document takes precedence. Nothing in this document, however, supersedes applicable laws and regulations unless a specific exemption has been obtained.

3 Performance Requirements

3.1 Overall Requirements

This specification establishes the requirements for space solar cells and solar panel assemblies which are deployed from a spacecraft bus. The spacecraft solar array converts solar energy into electrical energy by photovoltaic conversion. When the spacecraft is in the sunlight, the solar cells convert sunlight to electrical power to operate the spacecraft electrical loads and charge the energy storage system. The standard bus program requires that:

1. The two solar array wings are identical in form and fit.
2. The solar array is designed for maximum performance under environments specified in Section 4.
3. The power to mass ratio is optimized.
4. To minimize cost, schedule, and program risk: the solar array is based upon an existing qualified design.

3.1.1 Mission Events

The solar arrays shall be compatible with the series of mission events listed in Table 1.

Table 1: Standard Bus Mission Phases

Mission Phase	Description
On Ground Testing	The following shall be testable during ground testing: • Release and deployment • Environmental test, e.g. vibration, thermal cycling • Electrical performance The solar array will be subject to satellite sine and acoustic vibration tests. Possibly S/C TVAC pop and catch testing. A maximum of 20 on-ground deployments cycles by the procuring agency.
Ground Storage	The wings shall be capable of being stowed on the spacecraft for periods up to 6 months
Launch	The solar arrays may be stowed for up to 4 months prior to launch. See section 4.1 for launch environment.
Spacecraft Separation	See section 4.1.7 for separation shock.
Solar Array Deployment	See section 4.2 for environmental envelopes for solar array deployment. Spin rate of up to ±3 deg/sec about any axis.
Reboost or Transfer Orbit	The solar arrays shall survive a 20N thrust along the +Z axis for a combined duration of approximately 60 minutes to boost the spacecraft into an operational orbit.
Orbit Operation	The solar arrays shall generate power for the spacecraft as specified in section 3.3 for a period of at least one year of continuous operation.

3.1.2 Mission Orbit

The spacecraft will be inserted to an orbit of 185 km X 12,050 km with an inclination of 63.4°. Over a maximum period of 1 week, the orbit will be boosted to an operational orbit of 700 km X 12,050 km.

3.1.3 Operations

The solar array will be positioned via a stepper motor and harmonic drive within the solar array drive assembly (SADA). The output shaft of the SADA steps in 0.0075° increments. The solar array drive will have a nominal step rate of TBD Hz.

3.1.4 Design Life

The solar arrays shall be designed to meet the continuous performance requirements in this section after a period of at least 1 year with a target of 2 years.

3.2 Physical Characteristics

3.2.1 Co-ordinate system

The following coordinate system shall be used for the spacecraft. The Y axis passes directly through both solar array axis of rotation.

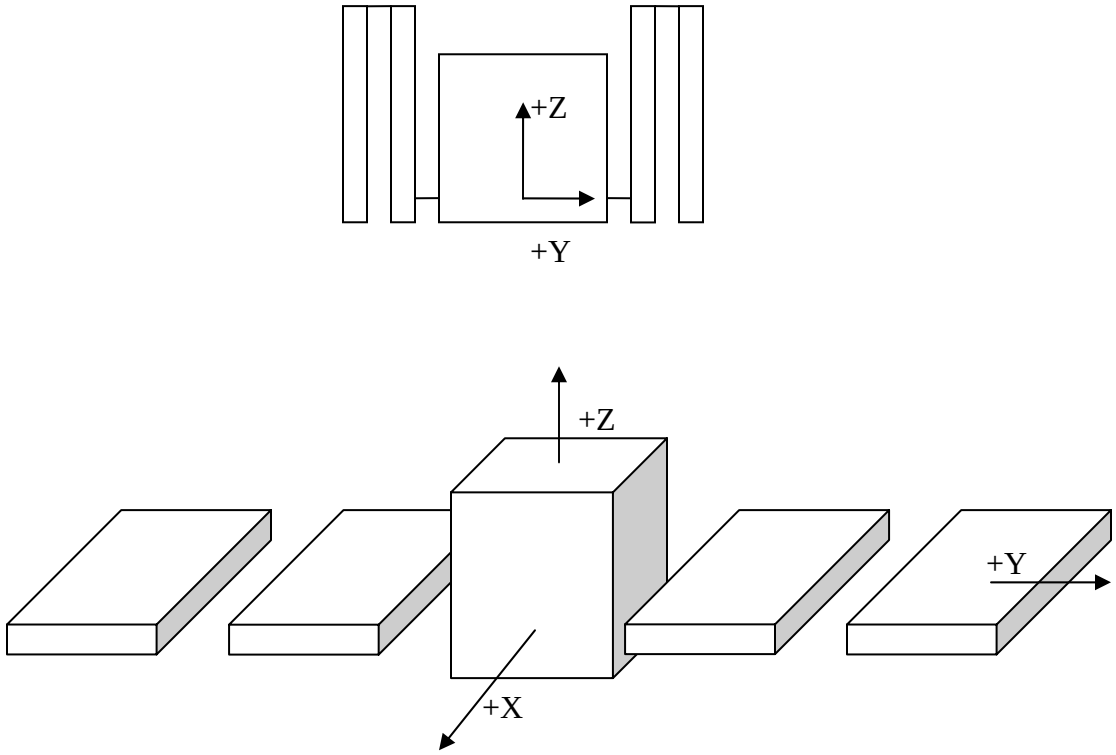

Figure 1: Spacecraft Coordinate System

3.2.2 Stowed Envelope

The stowed envelope of the solar arrays including but not limited to hinges, springs, dampers, harness, substrate, launch restraints, and yoke shall fit within the launch vehicle dynamic envelope with the octagonal bus dimensions specified in Figure 2. The maximum height of the solar panels shall not exceed 1.75 m.

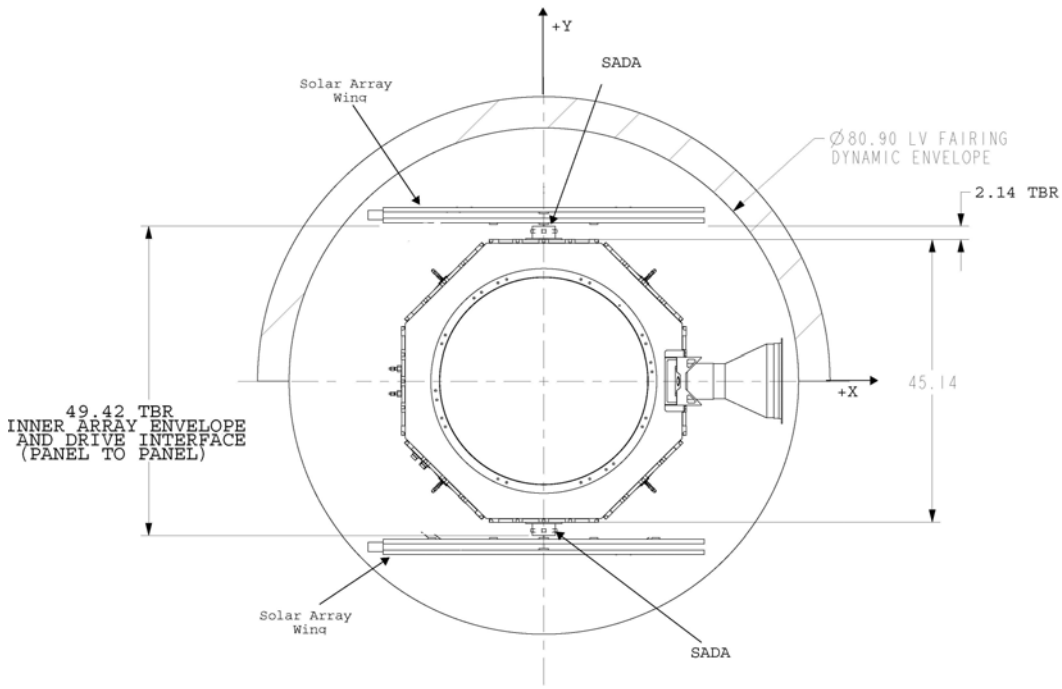

Figure 2: Solar Array Stowed Envelope – Top View (all dimensions in inches)

3.2.3 Deployed Envelope

The deployed envelope of the solar arrays including but not limited to hinges, dampers, harness, substrate, and yoke shall fit within the static envelope defined by a cylinder with a diameter of 190cm and a height of 400cm. The centerline of the deployed envelope cylinder is centered and aligned with the rotational axis of the SADA.

3.2.4 Alignment

The maximum misalignment on station of the deployed wing (including build misalignment, structural hysteresis, thermal distortion when illuminated and solar pressure bending) shall be within cone from the spacecraft interface and the nominal wing axis. The half cone angles shall be within:

a) Out of plane angle <3°
b) In Plane Angle <3°

3.2.5 Substrate

The vendor shall use a balanced lay up of carbon fiber face sheets on a honeycomb core if a rigid array is proposed.

3.2.6 Subsystem Mass

The total subsystem mass of both wings combined including all restraint hardware should not exceed 40 kg. The total solar array mass shall be divided equally between the +Y wing and –Y wing. The maximum deviation between the wings is 5% of total mass.

3.2.6.1 Moments of Inertia

The moments of inertia of one wing shall be calculated relative to the SADA interface with an accuracy of ±5%. The maximum moments of inertia are listed in Table 2 below:

Table 2: Maximum Moments of Inertia Per Wing

Axis	Inertia (kg*m^2)
I_{xx}	<110
I_{yy}	<10
I_{zz}	<110

3.3 Electrical Performance

The solar cells manufactured for Standard Bus shall have the beginning of life (BOL) performance characteristics listed in the following paragraphs when tested at 28°C, under illumination simulating the spectrum and intensity of one sun, Air Mass Zero (AM0). The solar arrays shall stow for the launch of the vehicle within the envelope shown in Figure 2. The exposed solar cells should be maximized for the launch configuration. Through a spacecraft generated power command, the arrays should deploy to their on orbit configuration to a maximum envelope described in paragraph 3.2.3 They will be positioned to an angle normal to the sun by a solar array drive assembly (SADA) within the accuracy specified in this section. It shall be demonstrate by analysis the in-orbit BOL, end of life (EOL), and on-ground performances are consistent, when taking into account the applicable degradations factors.

3.3.1 Power Output

3.3.1.1 Stowed Solar Array

During the phase of the mission when the solar arrays are stowed after launch, they should be capable of supplying electrical power to the spacecraft from the exposed panels on the outer wings.

3.3.1.2 Deployed Solar Array

The deployed solar array wings shall provide a combined minimum BOL power of 1kW while satisfying the design requirements and environmental conditions specified in sections 3.0 and 4.0. The deployed solar array wings shall provide a combined minimum EOL power of 800 watts while satisfying the design requirements and environmental conditions specified in sections 3.0 and 4.0.

3.3.1.3 Solar Cell Strings

A solar cell string shall have as a minimum the BOL electrical characteristics defined below when measure per paragraph 7.2.4:

a) Open Circuit Voltage(Voc) shall measure 51.5 volts minimum
b) Short Circuit Current (Isc) shall measure 457 mA minimum
c) Voltage at the maximum power point shall measure 45.6 volts
d) Current at the maximum power point shall measure 437 mA

3.3.1.4 Solar Cells

The solar cells shall be metallic organic vapor epitaxy (MOCVD) technology with shallow diffused, gridded, n on p polarity, gallium indium phosphide on gallium arsenide on germanium (GaInP/GaAs/Ge) substrate construction.

3.3.1.4.1 Solar Cell Off Pointing Angles

The solar array shall be positioned relative to the SADA interface with a pointing accuracy of Alpha = ± 5° of nominal, Beta = ± 5° of nominal. Nominal is defined as normal to the sun vector.

3.3.1.4.2 Solar Cell Antireflective Coating

The active surface of the solar cell shall be treated with an antireflective coating designed to provide optimum electrical output from the solar cell.

3.3.1.5 Electrical Contacts

Electrical contacts shall be per the manufacturer standard process for flight aerospace quality solar cells. The “n” ohmic bar shall be along the long dimension of the cell, and the “p” contact shall be on the inactive (rear) solar cell surface. The “p” contact and collector grid shall be gold-nickel-silver or government approved equivalent. The “n”contact and collector grid shall be titanium-gold-silver or government approved equivalent

3.3.1.6 Solder

If used, wiring solder shall conform to J-STD-004 type Sn-Pb 60/40 with RMA flux.

3.3.1.7 Coverglass Antireflective Coating

The outside surface of the coverslide shall be treated with magnesium fluoride ($MgFl_2$) antireflective coating or an alternative material designed to provide optimum electrical output from the solar cell.

3.3.1.8 Ultra-Violet Rejection

The coverslide transmission characteristics and ultra-violet rejection characteristics shall be specified to be compatible with the cell response and adhesive characteristics

3.3.1.9 Terminal Boards

All terminal board(s), or bus bar(s), and blocking diodes shall be located on the backside of the panel or another suitable location. The terminal board(s) or bus bar(s) shall provide terminations for the negative and positive sides of all solar cell strings to be soldered to terminals on the terminal board (on the bus bar) with AWG 22 wire.

3.3.1.10 Blocking Diodes

A blocking diode shall be used with each solar cell string providing reverse current isolation and power bus protection. The forward voltage drop of each diode shall not exceed 0.850 Vdc at 1.0 A. The reverse current leakage shall not exceed 10 µA at 50 Vdc. Blocking diodes shall be mounted on diode boards, which shall be located on the solar array wings. Diode boards shall be conformally coated.

3.3.2 Electrical Continuity and Grounding

The solar array shall withstand the effects of electrostatic charging in operational orbit without suffering out of specifications performances. The solar array shall be designed so that self-induced electrostatic discharges cannot damage the solar array or permanently impair its performance.

3.3.2.1 Insulation Resistance

The array substrates shall be tested to provide a minimum of 100 Megohms resistance when measured at 100 Vdc. The measurement shall be made between the Kapton insulating surface and the panels' spacecraft mounting point.

3.3.2.2 Substrate Surface Conductivity

The maximum resistance of the substrate surface shall be 10^9 Ohms/square across each panel.

3.3.2.3 Grounding

The deployed wing structure shall be electrically connected to the spacecraft ground at the S/C electrical interface connector

Metal parts connected to the panels and/or extension arm shall be electrically connected. The maximum allowable resistance between the metal part and the panel/extension arm grounding point shall be less than 10 kOhm. This requirement is not applicable for the side of the panel hinge, which is intended to be insulated from the panel.

<u>Solar array panels</u>
Each panel shall be electrically insulated from the adjacent panel(s) and extension arm. The resistance between adjacent panel(s) and extension arm shall be greater than 1 Megohms.

The panel structure shall be grounded via redundant 10 to 100 kOhms bleed resistors, each connected to the spacecraft ground by two grounding lines.

<u>Grounding lines</u>
Grounding lines shall be wired via panel connectors and form part of the power transfer harness. The DC resistance between any point of the panel substrate's honeycomb including the inserts and the grounding point on the panel shall be ≤ 100 Ohms. The DC resistance between any point of the panel substrate's carbon fiber facesheet rear side and the grounding point on the panel shall be ≤ 100 Ohms. The panel substrate's carbon fiber rear side and the honeycomb shall be bonded by ≤ 100 Ohms by at least two points.

3.3.3 Magnetic Moment Cancellation

Wiring shall be routed in a manner that minimizes magnetic dipole moments. The maximum allowed magnetic moment should not exceed 3 A-m^2 for both wings combined.

3.4 Structural Performance

3.4.1 Stiffness

The stiffness requirements for the solar panel wing assemblies are specified for an infinitely rigid spacecraft. The accuracy of the frequency predictions for the first mode below 100 Hz shall be within 5%.

3.4.2 Stowed Configuration

The minimum frequency of the solar array shall be greater than 30 Hz assuming an attachment to the rigid spacecraft.

3.4.3 Deployed Configuration

The first mode cantilever frequency of the deployed solar array wing shall be greater than the values specified in Table 3 assuming the wing hard mounted at the SADA interface.

Table 3: Deployed Natural Frequency

Mode	Frequecy (Hz)
Out of Plane Mode	>0.25
In Plane Mode	>0.25
Torsional Mode	>0.25

3.5 Solar Array Deployment

The solar array shall be capable of being deployed at any of the environmental conditions outlined in sections 4.2 and 5.2.

3.5.1 Deployment Commanding

Solar array wing release shall be initiated by a command from the spacecraft command and data electronics (CDE) box. The release mechanisms actuation shall have a primary and redundant circuit. The redundant circuit can either be fired in conjunction with the primary or as a separate command. The commanding of the release devices are subject to the requirements described in paragraph 5.3.3.

3.5.2 Deployment Temperatures

The solar arrays shall remain in the stowed position over the stowed temperature range of -40°C to +50°C until commanded to deploy. The solar arrays shall be capable of being deployed over the temperature range of -40°C to +50°C.

3.5.3 Yoke

A yoke is required to interface between the SADA and the inner panel's substrate to prevent shadowing from the payload onto the arrays. The yoke length in addition to any unpopulated substrate (if applicable) along the y axis shall be greater than 1.26 meters in

length as shown in Figure 3. The length of the B dimension shall be based on the string layout specified in paragraph 3.3.1.2.

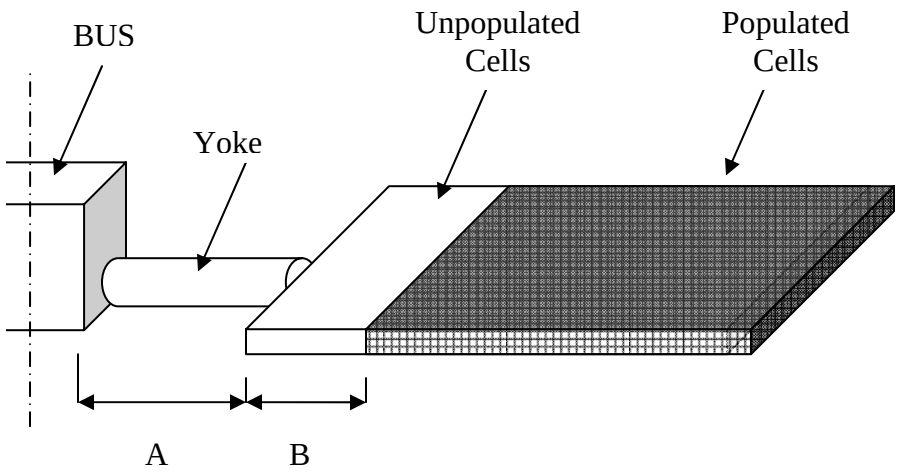

A + B > 1.26 m

Figure 3: Minimum Yoke Length

3.5.4 Restraint Mechanism Assembly

The restraint mechanism assemblies shall be attatched to the outer face of the spacecraft bus's honeycomb panels.

3.5.5 Deployment Kinematics

The solar array deployment shall be controlled to:

- Have no impact with the spacecraft body.
- A controlled rate of deployment without stoppage of the wing.
- No disturbance torque's on the spacecraft after completion of deployment motion and positive latch up.
- Not to eject or detach any (free) parts from the solar array as a result of release or deployment
- Not to free or partially free parts that could result in cells being shadowed after deployment.
- Not to rely on kinetic energy from the spacecraft for deployment
- The deployment shall take no longer than 15 minutes from commanding the release to full deployment (i.e. latch up or end of motion) at all environmental conditions outlined in paragraphs 3.5.2 and 4.2.
- Deployment margins shall be at least 100% (2 to 1) at worst case environmental conditions.

3.6 Thermal Performance

The thermal control of the solar array shall be achieved by passive means with the exception of deployment. Thermal control is possible for hinge or damper locations after approval by the COR. The thermal design shall guarantee that the unit can achieve its performance to the extent specified in the document for the thermal environment throughout the mission. The solar array shall withstand the thermal gradients caused by eclipse or spacecraft shadowing.

3.7 Instrumentation

3.7.1 Deployment indicator

Each solar wing shall be equipped with at least one end-of deployment indicator to confirm a successful deployment.

3.7.2 Temperature Sensors

The solar wings shall each be equipped with temperature sensors on the backside of the panels (one temperature sensor on each panel) and a temperature sensor within 10 cm of each coarse sun sensors (if used).

3.7.3 Sun Sensors

The procuring activity has the option to require the vendor to attach a total of two government furnished sun sensors on each wing. The procuring agency shall work with the vendor to determine the desired location and orientation of the sun sensors. The dimensions of the sun sensors are TBD. The maximum mass of each sun sensor will be 150 grams.

3.8 Transportability

Each unit shall be capable of meeting the requirements of this specification after shipment by air or surface carrier. Protective packing and packaging, as specified in Section 8, shall be provided by the supplier to withstand environmental conditions associated with shipping, storage, and handling that are expected to exceed the conditions specified herein.

3.9 Maintainability

The solar arrays shall not require scheduled maintenance. However, the contractor shall provide procedures for cleaning of the solar arrays after exposure to environmental testing. The design and construction of the array section shall provide the capability for removal and replacement of individual cells at any time up to launch campaign on a deployed wing. The capability for replacement of solar cell array sections, sub-units of a solar panel assembly, cracked or broken cell shall be included in the design.

The solar array release devices shall be capable of up to 20 deployments at the procuring activity for each device without having to replace the unit.

4 Design Requirements

The solar array assembly shall be designed to meet the requirements of this specification after being subjected to the environmental test conditions listed in this section. The unit will be mounted external to the spacecraft and shall support continuous operation in this environment.

4.1 Non-Operating Environment

The solar arrays shall meet the requirements of this specification without refurbishment or adjustment, after exposure to any combination of the conditions specified herein while the equipment is not in operation.

4.1.1 Acceleration

The solar arrays shall be designed to withstand the quasi-static limit load of 30 g's, applied separately along the 3 principal axes of the space vehicle while stowed. These levels are intended to be applied at net center-of-gravity of the component for structural design. They are not intended to envelope all possible component subassembly or piece part responses that may occur during a sine or random vibration test. Excessive internal responses due to vibration testing must be addressed by the supplier.

4.1.2 Random Vibrations

The random vibration test is used to qualify the hardware for the expected launch environment as well as workmanship screening for the components. The solar arrays shall be subjected to the random vibration levels given in Table 4. This test level is to be applied along each of its three principal axes of the space vehicle. All vibration levels are to be applied at the mounting interface to the spacecraft bus. They are not intended for individual component subassembly or piece part testing.

Any request to modify the specified random vibration test through methods such as force limiting, input notching or response limiting will be addressed on a case by case basis. For these cases, test plans/procedures must be approved by COR prior to component protoflight testing.

Table 4: Random Vibration Test Levels

Frequency (Hz)	PSD Level
20	0.0263 g^2/Hz
20-50	+6 dB/Oct
50-800	0.16 g^2/Hz
800-2000	-6.0 dB/Oct
2000	0.026 g^2/HZ
Overall Amplitude = 14.1 Grms Duration = 60 seconds	

4.1.3 Sine Survey

A sine survey (0.25 g amplitude, 5 to 2000 Hz) shall be performed on the solar array assembly at the beginning and at the end of each axis of sine/random vibration testing. Appropriate instrumentation must be used to identify fundamental frequencies for stiffness verification and to detect any changes in structural response that would be indicative of a failure.

4.1.4 Acoustic

An acoustic test will be performed to verify that the space vehicle will survive the high frequency vibration associated with liftoff and the transonic portion of the flight. The test levels specified in Table 5 are the maximum predicted environment (MPE+3 dB). The acoustic test will be performed at the spacecraft level by the procuring activity.

Table 5: Spacecraft Protoflight Acoustic Test Levels

Octave Band Center Frequency (Hz)	Protoflight Levels (dB)
20	117.5
25	118.7
31.5	119.8
40	121.9
50	122.6
63	123.1
80	124.5
100	125.4
125	125.9
160	129.5
200	130.2
250	130.5
315	130.4
400	130.1
500	128.4
630	123.9
800	121.5
1000	117.9
1250	113.9
1600	112.5
2000	111.7
2500	112.3
3150	111.7
4000	110.3
5000	112.2
6300	106.9
8000	103.1
10000	102.5

OASPL = 139.2 dB: 1 minute duration

(dB Ref 2.0 x 10^{-5} N/m^2)

4.1.5 Pressure

The arrays shall withstand ambient pressures varying between 12 and 16 psi (atmospheric) and a vacuum of less than 1 X 10^{-5} torr and varying at rates up to 0.76 psi per second.

4.1.6 Humidity

The arrays shall withstand relative humidity ranging from 30 to 60%, with no condensation. Packaging of the arrays for shipping and storage shall ensure that condensation does not occur.

4.1.7 Pyrotechnic Shock

The arrays shall be present during spacecraft separation system test firings. The test will be performed by the procuring activity. For the Standard Bus, the maximum predicted environment (MPE +3dB) for the light band separation system is listed in Table 6. The solar arrays shall survive any shock generated by the array's restraint release devices actuation.

Table 6: Light Band Seperation Shock

Frequency (Hz)	SRS* Levels (g's)
100	6
10000	900

Based on Q=10

4.2 Operating Environment

The arrays shall meet the requirement of this specification during continuous exposure to any combination herein

4.2.1 Temperature

The arrays shall operate properly when the surroundings and the surface on which it is mounted are maintained at any temperature between -150°C and +105°C for prototype testing and on-orbit operations in the deployed configurations. During the orbital design lifetime the solar array will experience approximately 3000 thermal cycles.

4.2.2 Pressure

The arrays shall operate properly when in the range of ambient pressure from 12 to 16 psi (atmospheric) and a vacuum of less than 1.0 x 10^{-5} torr. The solar array shall not be required to operate at partial pressures between these extremes.

4.2.3 Humidity

The arrays shall operate properly during ground testing while exposed to relative humidity (non-condensing) ranging from 30% to 60% at atmospheric pressure.

4.2.4 Radiation

The radiation environment described in this section is indicative of the environment experienced by the spacecraft over the entire orbit. The radiation impact is likely to be primarily confined to the time spent traversing the Van Allen belts. Further analysis is required by the vendor.

The Standard Bus shall have an operational life of one (1) year and a design life of 2 years in a highly elliptical orbit (HEO) with an apogee of 12,050 km, a perigee of 700 km, an inclination of 63.4°, and an argument of perigee TBR. For reference only, the equivalent 10 MeV proton fluence after one year in this orbit for a Triple-Junction InGaP/GaAs/Ge solar cell with a 6 mil thick coverglass is 2.46 X 10^{15}. The equivalent 1 MeV electron fluence is 2.82 X 10^{12}. These calculations have been performed using the JPL Equivalent Fluence Method as implemented in SPENVIS using the MANTECH solar cell data from Marvin [D. C. Marvin, Aerospace Report NO. TOR-00(1210)-1].

Table 7: Charged Particle Radiation

Particles	Voc	Isc	Pmax
Trapped Protons	2.86 E+15	2.29 E+15	2.44 E+15
Trapped Electrons	5.78 E+12	5.78 E+12	5.78 E+12
Solar Protons	1.29 E+13	9.07 E+12	1.10 E+13
Totals	2.88 E+15	2.31 E+15	2.46 E+15

4.2.5 Corona Suppression

Proper performance of the arrays shall not be impaired by corona discharge in normal operating environments, and the arrays shall not be a source of corona discharge at atmospheric or hard vacuum.

4.2.6 Electrostatic Discharge

The solar cell strings shall be arranged so as not to induce an electrostatic discharge.

4.3 Design and Construction

The following paragraphs describe the general requirements for design and construction that are applicable to the solar arrays.

4.3.1 Materials Selection

The solar array shall use only materials exhibiting Total Mass Loss (TML) of 1.0% or less and Volatile Condensable Material (VCM) values of 0.1% or less per NASA SP-R-0022. Any materials that fail to meet these criteria shall be identified to the procuring activity.

Metallic materials shall be corrosion resistant by nature or shall be corrosion inhibited by means of protective coating. Base metals intended for intermetallic contact that form galvanic couples (MSFC-STD-3029: Table 1) shall be plated with those metals that reduce the potential difference or shall be suitably insulated by a nonconducting finish. Base metals that fare listed in MSFC-STD-3029: Table 2 need approval by the COR before using. Electrical bonding methods shall include provisions of corrosion protection of mating surfaces. Use of dissimilar metals shall be avoided.

4.3.1.1 Fungus

Unless otherwise specified or approved, materials which are fungus nutrients shall not be used.

4.3.1.2 Prohibited Materials

Based on known degradation and deleterious effects under vacuum, the following materials are prohibited from use on any SB assembly unless approved by the COR.

- Silicon elastomers external to the spacecraft with CVCM > 0.05%
- Silicon elastomers internal to the spacecraft with CVCM >0.10%
- Highly filled (pigmented) thermal control coatings
- Materials that off-gas corrosive materials (e.g. silicone caulks/acetic acid)
- Cadmium, zinc, or unfused electro-deposited tin plating
- Materials and processing that result in dissimilar coupling

4.3.2 Adhesives

Adhesives used shall be compatible with the environments specified herein. The contractor shall maintain process plans for application, mixing, and curing of all adhesives used in the fabrication of the arrays. MIL-A-83377 may be used as a reference for the process plans. The processes and procedures shall be made available for procuring activity review. Bonding of wire, terminal boards, etc., shall be accomplished with low outgasing materials described in paragraph 4.3.1, suitable for space application and the environment of the solar array.

4.3.3 Parts Selection

Electronic parts shall be designed and selected for high reliability and long life in storage, test, and in operational use in the launch environment and during on-orbit operations in the space environment. All parts shall be hermetically sealed. The radiation hardness characteristics of all parts shall be established, implemented, documented, and maintained. Parts and materials which have been installed in an assembly and which are then removed from an assembly for any reason shall not be used in any item of

spaceflight hardware. Justification for the use of nonstandard or unapproved parts shall be approved by the COR.

4.3.3.1 Traceability

The supplier shall maintain a system for categorizing electronic parts into sets of homogeneous groups and tracing those parts through the fabrications, assembly, test, and delivery cycles. Parts shall be traced by part number, serial number (when available) and lot number. The supplier shall maintain fabrication records capable of providing two-way traceability from the first stages of assembly through final acceptance testing and in the reverse order. The records shall be identifiable to the item serial number.

4.3.3.2 GIDEP Alerts

The Supplier will review all published Government-Industry Data Exchange Program (GIDEP) alerts to assess their applicability and impact on their hardware. Should a GIDEP alert involve a part used in this procurement, APL shall be notified.

4.3.4 Soldering and Other Processes

Soldering and other processes shall be specified in Supplier-approved process specifications. Other special processes (e.g., adhesive bonding, plating, etc.) shall be according to the Supplier's approved process specifications.

4.3.5 Electrostatic Discharge Sensitive Parts

All electrical components utilizing electrostatic discharge sensitive parts shall provide adequate protection to preclude part failure resulting from handling, shipment, or storage situation, according to MIL-STD-1686A.

4.3.6 Grounding and Shielding

The solar arrays system components shall be electrically bonded to the spacecraft in accordance with MIL-STD-464C.

4.3.7 Finishes

Protective methods and materials for cleaning, surface treatment, and applications of finishes and protective coatings shall be implemented. Neither cadmium nor zinc coatings shall be used. Unfused electroplated tin shall not be used. No unprotected silver plating shall be used. No unprotected copper shall be used.

4.3.8 Nameplates and Product Marking

Each solar panel shall be permanently marked with the contractor's name, part number, serial number, and government part number. Marking shall be on the non-cell side of the panel and adjacent to the terminal board.

4.4 Reliability

4.4.1 Single Point Failures

A single point failure is defined as a part that would cause equipment performance below the specified performance by its failure. Any single point failures shall be avoided wherever practical and identified to the COR with technical justification for COR approval at PDR.

4.4.2 Failure Modes, Effects, and Criticality Analysis

As part of the design process, a Failure Modes and Effects Analysis (FMEA) shall be performed by the supplier at the interface level.

4.4.3 Electrical Parts Stress Analysis

As part of the design process, an electrical stress analysis shall be performed by the supplier.

4.4.4 Failure Reporting and Corrective Action System

A closed loop failure reporting and corrective action system (FRACAS) for reporting, analysis, and corrective action shall be in effect for failures occurring during the acceptance testing phases. The FRACAS shall determine whether failures are caused by design deficiencies, human error, defective parts, infant mortality, test equipment, environmental exposure, or software.

4.4.5 Non-Conformance Reporting

The contractor shall implement a non-conformance reporting system using the requirements of MIL-Q-9858A, and MIL-STD-1520C as guidelines. When a nonconformance occurs during acceptance testing, the contractor shall discontinue testing and report the non-conformance to the procuring activity within 24 hours. Testing and retesting shall not continue until approved by the procuring activity. The contractor shall document all troubleshooting steps to be accomplished and obtain procuring activity approval prior to accomplishing trouble shooting.

4.4.6 Workmanship

4.4.6.1 Processes and Controls

Each part or material, each subassembly, and each cell will be subjected to in-process manufacturing and assembly screens and tests to assure compliance with the specified requirements and satisfactory performance and reliability. Parts and materials that cannot be adequately tested after assembly will be subjected to in-process controls and in process screening during their manufacture to assure satisfactory performance and reliability.

a) All parts and materials shall be adequately controlled and inspected prior to assembly.
b) During the fabrication of the components, the tools and processes, as well as the parts and materials, shall be adequately controlled and inspected to assure compliance with requirements.

The manufacturing processes and controls shall provide a supplier-controlled baseline that ensures subsequent production items can be manufactured that are identical to, or better in performance, quality, and reliability than, initial production items used for qualification or flight demonstrations. For space equipment, these process controls shall be documented to give visibility to the procedures and specifications by which all processes, operations, inspections, and tests are to be accomplished by the supplier. This internal supplier documentation shall include the name of each component or part, each material required, the point it enters the manufacturing flow, and the controlling specification or drawing. The specifications, procedures, drawings, and supporting documentation shall reflect the specific revisions in effect at the time the item(s) used for qualification were produced.

4.4.6.2 Control and Use of Nonconforming Material

Nonconforming material shall not be used without approval of the procuring agency. All nonconforming material used in the final product shall be documented and submitted for waiver. Nonconforming material shall be stored in a controlled area until disposition can be made.

5 Interface Definition

5.1 Structural/Mechanical Interfaces

5.1.1 Physical

There shall be provisions to allow snubbering of the yoke and panel against the aluminum honeycomb spacecraft sidewall. The exact position of the snubbers shall be specified by the contractor and approved by the COR. The snubbers and restraint assembly shall lie within the footprint defined in Figure 4. The foot print is a rectangular shape that extends 3” on all sides from the spacecraft panel the SADA is

mounted to. The spacecraft panel is 17.25” X 33.00”. The footprint size is 23.25” X 39.00”. Any deviations from this footprint must be approved by the COR by PDR.

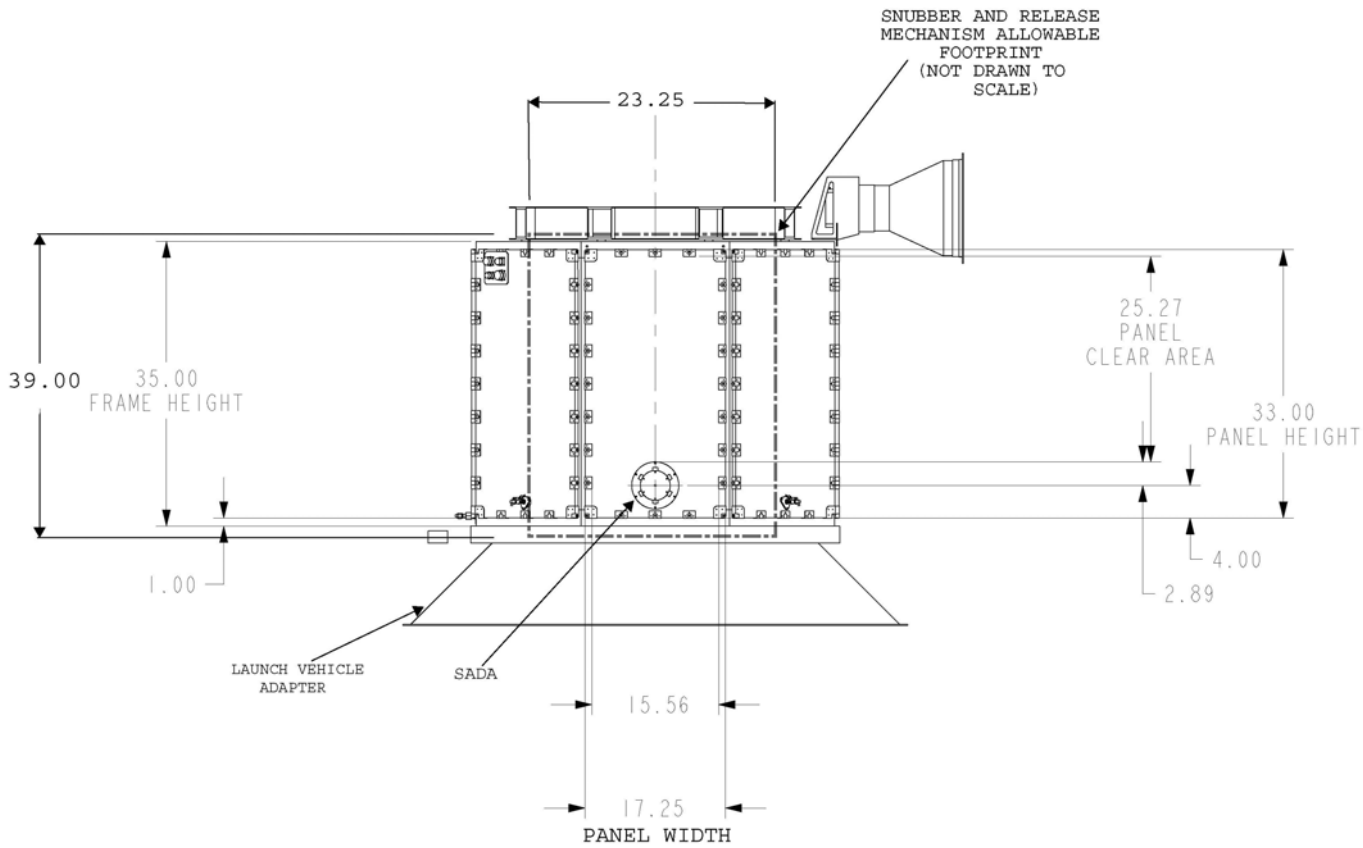

Figure 4: Snubber and Restraint Mechanism Footprint (all dimension in inches)

5.1.2 SADA Interface - Deployed Configuration

The SADA mounting interface is TBD. The flight limit load applied to the S/C interface shall not exceed those specified below during its complete life.

- The maximum allowable combined bending moment is: M = 250 Nm where $M = \sqrt{(M_x^2+M_z^2)}$
- The maximum allowable combined force is: F = 10,000 N where $F = \sqrt{(F_x^2+F_y^2+F_z^2)}$

5.1.3 Yoke

The yoke shall attach to the SADA interface.

5.2 Thermal Interface

5.2.1 Stowed Configuration

The temperature of the spacecraft sidewall shall be within the range of: -25°C to +55°C.

5.2.2 Deployed Configuration

The temperature of the spacecraft sidewall shall be within the range of: -25°C to +55°C.

5.2.3 Spacecraft Sidewall

The maximum linear coefficient of thermal expansion for the spacecraft sidewall structure is: $\alpha = 22*10^{-6}$ m/m/°C.

5.2.4 Restraint Hardware

The mechanical interface for all restraint related hardware including but not limited to: release mechanism, snubbers, harness tie downs, and connects must be approved by the COR within 4 months ARO. The procuring activity suggested mounting locations with keepout zones (SADA) are shown in Figure 4. Additional mounting locations or need for additional surfaces must be approved by the COR by PDR.

5.3 Electrical Interfaces

5.3.1 Solar Array Drive Assembly (SADA)

The SADA slip ring capabilities are listed in Table 8. The solar array wing shall mate to the SADA with a TBD connector. The SADA will have the capability to pass through a minimum of four (4) thermistors, two (2) coarse sun sensors, and 1 (1) heater circuit per wing.

Table 8: SADA Rings Capabilities (TBR)

Number of Rings	Description	Amps[1]	Volts[2]
30	Solar Array Power Rings	3	65
15	Signal Rings	1	7.5

[1] Derated Value
[2] Volts are defined as the worst case voltage that can exist between points in the system.

5.3.2 Deployment Heaters & Deployment Thermistors

The vendor has an option to request power for heaters to regulate dampers or other deployment device temperatures. The number of allowable heater circuits for damper temperature regulation shall be no greater than 3 per wing. The heaters circuits shall require no more than 7.5 watts of peak power and shall be self regulating. Thermistors shall be placed at each heater location if multiple heaters are placed on a single circuit. The slip rings used by the vendor for heaters and thermistors through the SADA interface are deducted from the total number of rings available. The vendor shall determine the number of heater and thermistors circuits needed by PDR.

5.3.3 Release Mechanism(s)

The individual release devices shall be powered by a maximum of 4 amps for 2 seconds or 2 amps for 300 seconds. The vendor shall notify the procuring activity by PDR which implementation is required. 2 amp 300 second, devices shall be actuated with a power supply of 28 VDC +/- 6 V. 4 amp 2 second devices may be actuated with a power supply of less than 22 VDC due to current limiting circuitry within the CDH. Each release mechanisms shall be separately addressable. Sequencing of the release mechanisms must be approved by the COR. The design shall not require more than 4 amps combined for simultaneously fired devices. Each release mechanism delivered shall have a harness with a maximum length of 3 meters (TBR). The design shall have a maximum of 8 circuits for release devices including redundant circuits. The release mechanism harness shall be a twisted, shielded pair with the shield grounded to the spacecraft structure. The release devices shall be non-explosive by design.

5.3.4 Thermistors

The thermistor interface shall be determined by PDR. The procuring activity shall notify the vendor by PDR the exact number of thermistors needed.

5.3.5 Coarse Sun Sensors

The coarse sun sensor (CSS) interface shall be determined by PDR. The vendor shall provide the capability for mounting up to 2 CSS per wing. The procuring activity shall notify the vendor by PDR the exact number of sun sensors to be implemented.

5.3.6 Deployment Indicators

The end-of-deployment indicator shall be a break wire type device where both ends of the wire are provided to the spacecraft sensing hardware. The signals shall be isolated from all other solar array electrical power and signals by a minimum 1 MegOhm resistance.

6 Documentation

The contractor shall deliver, as a minimum, the following items of documentation in accordance with the form DD 1423 Contract Data Requirements List (CDRL).

6.1 Parts List

The Supplier shall provide a parts and materials list for the item. This list shall identify all magnetic materials, nonconforming materials, outgassing materials, and limited life materials/components.

6.2 Flight Solar Array Drawings

For the flight solar arrays, the contractor shall deliver:

a) Top Assembly Drawings
b) Wiring Diagrams

6.3 Flight Solar Array Deployment Manual

The contractor shall prepare and deliver a manual to provide instructions to the procuring activity for deploying the solar arrays on for ground testing and in orbit. The manual shall include instructions for re-stowing the arrays.

6.4 Flight Solar Array Test Report

The contractor shall prepare and deliver test reports in accordance with the form DD 1423 CDRL for the assembled flight solar panels that includes as a minimum; a detailed weight breakdown, electrical I-V curves for each solar cell string mounted on the panels, electrical insulation resistance test results, and full deployment test results.

6.5 Non-Conformance Report

The contractor shall provide a written summary of each non-conformance that occurs during acceptance testing in accordance with the DD 1423 CDRL.

6.6 Status Reports

The contractor shall submit to the COR a monthly status report in accordance with the form DD 1423 CDRL.

6.7 Final Report

The contractor shall submit to the COR a final status report which summarizes the design, production and test effort in accordance with the DD 1423 CDRL.

The Final Report shall include a parts list. The Supplier shall provide a parts and materials list for the item. This list shall identify all magnetic materials, nonconforming materials, outgassing materials, and limited life materials/components.

6.8 Drawings / Configuration Control

The manufacturer shall have a configuration control system for all drawings generated under this program.

6.8.1 Documentation Changes

All documentation changes shall be categorized as Class I or Class II.

6.8.1.1 Class I

Class I changes are those that affect the form, fit, or function (including safety and reliability) of the solar array assembly. All Class I changes shall be submitted to the customer for review and approval.

6.8.1.2 Class II

Class II changes are those that do not affect the form, fit, or function (including safety and reliability) of the solar array assembly. All Class II changes shall be submitted to the customer for concurrence in the classification.

7 QUALITY ASSURANCE (QA) PROVISIONS

7.1 General

This section describes the analyses, tests, and inspections required for the solar arrays verification process. Verification of the solar arrays' design, construction, and performance shall ensure that the hardware and software conform to the requirements stated herein. The preferred method shall be testing, where practical, to obtain empirical data to support verification. The supplier shall implement a Quality Assurance program to verify compliance with specified requirements. The analyses, tests, and inspections specified in this section shall be conducted to verify that all requirements specified in Sections 3.0, 4.0, and 5.0 have been achieved. Test requirements shall be as stated herein and defined by MIL-STD-1540D or its equivalent. The Quality Assurance plan shall be available for review by the procuring activity at the preliminary design review.

7.1.1 Responsibility for Tests

Testing shall be accomplished at both the contractor's and the government's facilities. The government/contractor will have the option of witnessing all tests and demonstrations specified herein. The government/contractor shall notify the COR/contract officer at a minimum of five (5) working days prior to testing.

7.1.2 Verification Methods

The requirements of Section 3 shall be verified by one or more of the following methods:

a) Analysis
b) Similarity
c) Inspection
d) Test

7.1.2.1 Verification by Analysis

Analyses shall be performed to provide analytical assurance that the solar array design meets the design requirements.

7.1.2.2 Verification by Similarity

The solar array design shall be compared to existing qualified solar array design(s) to demonstrate that the proposed design meets or exceeds the design requirements.

7.1.2.3 Verification by Inspection

Inspections shall be performed to verify that the design, construction and documentation of the design requirements have been met. These inspections are to be performed prior to acceptance or qualification test as part of the supplier's normal quality control inspection process.

7.1.2.4 Verification by Test

Each solar array shall be subjected to Protoflight Tests specified in paragraph 7.2.4.1 herein.

7.2 Quality Conformance

Each requirement in Section 3 will be satisfied by the identified methods of inspection, similarity, analysis and/or test. A vendor proposed verification matrix shall be supplied at PDR or sooner for COR approval

7.2.1 Test Approach

7.2.1.1 QA Plan

A QA Plan, including tests and evaluations as specified in this section, shall be conducted using the guidelines of MIL-STD-1535A. In the event the contractor utilizes sub-tier contractors, the contractor shall implement a contractor QA program in accordance with MIL-STD-1535A for these sub-tier contractors.

7.2.1.2 Materials Qualification

The contractor shall qualify all materials via the combined processes of:

a) Initial selection of materials by materials engineers using applicable specifications for space qualified materials
b) Proof testing or data acquisition as applicable
c) Material Certification
d) Vendor audit and certification
e) Design reviews and manufacturing audits by materials engineers and process engineers
f) Satisfactory completion of testing of engineering and qualification model equipment, where applicable.

7.2.1.3 Tolerances

Instrumentation measuring devices and systems used to monitor the vibration, humidity, pressure, and temperature environments shall be calibrated to provide the following specific accuracies. These tolerance accuracies are given to inform the tester/test agency for the selection of the desired instrumentation.

a) Temperature ±5°C
b) Force ± 5%
c) Torque ± 10%
d) Barometric Pressure± 10%
e) Relative Humidity± 5%
f) Vibration (acceleration) ± 3%
g) Vibration frequency± 2% or 2 Hz
h) Time of Vibration +5sec, -0 sec
i) Angle ± 5%

7.2.2 Ambient Conditions

Unless otherwise specified in the procedure or constrained by the specification herein, the following shall be considered facility ambient conditions:

a) Temperature: 15 ° C to 32 ° C (59 ° F to 90 ° F)
b) Relative Humidity: 40 to 90%
c) Barometric Pressure: 763 torr to 558 torr
d) At no time shall condensation be allowed to form on components. Humidity reduction measures shall be required when environmental or unit temperatures are to be reduced, with special consideration given to components with restricted air movement or exchange rates. Vapor resistant wraps with desiccants, evacuation and back-purge with dry gas and similar measures are applicable.

7.2.3 Cleanliness Requirements

The contamination control requirements specified herein shall apply to the conduct of testing of production hardware. Assembly of flight hardware shall occur in a class 10,000 clean room or better.

7.2.4 Solar Array Tests

The following requirements shall be verified by test and conducted in the sequence shown:

7.2.4.1 Protoflight Tests

The following tests shall be performed by the contractor (C) and the government (G) on the flight articles.

a) Examination of Product (C)
b) Substrate Isolation (C)
c) Visual Inspection (C)
d) Electrical Performance (C)
e) Thermal Vacuum Cycling (C)
f) Static Loads (C)
g) Acoustic Vibration per paragraph 4.1.4
   - Flight Panels (G)
   - Qualification Panels (G)
h) Random Vibration per paragraph 4.1.2 (C)
i) Pyrotechnic Shock (G)
j) Deployment Testing (C)
k) Torque Margin (C)

7.2.5 Test Description

7.2.5.1 Examination of Product

Each panel shall be inspected and measured to insure compliance with the following:

a) Drawing Conformance
b) Weight
c) Identification and Marking
d) Workmanship

7.2.5.2 Visual Inspection

Each solar cell circuit assembly shall be inspected under not less than 7x stereo magnification for cell, cover, and interconnect specification conformance. Following initial inspection, emphasis may be placed on possible damage resulting from testing and/or handling.

7.2.5.3 Substrate Isolation

Each solar panel shall be tested to provide a minimum of 100 Megohms resistance when measured at 50 Vdc. The measurement shall be made between the (a) the positive leads and the substrate spacecraft mounting point (b) the negative leads and the substrate spacecraft mounting point, and (c) each temperature sensor lead and the substrate spacecraft mounting point.

7.2.5.4 Solar Cell String Electrical Performance

Each solar cell circuit shall be tested under illumination simulating the spectrum and intensity of one Sun, AM0 with the temperature corrected to 28°C.

7.2.5.4.1 Panel Electrical Performance

Each solar panel shall be tested for total power output including voltage drop.

7.2.5.4.2 Bypass Diode IR Test

The health of each bypass diode shall be verified by reverse biasing the string. IR photographs of the bypass diodes shall be made while the strings are reverse biased. The reverse current shall not exceed the string Isc.

7.2.5.4.3 Blocking Diode Test

The health of each blocking diode shall be verified by measuring the forward voltage and the reverse leakage current of each blocking diode.

7.2.5.5 Thermal Vacuum Cycling

Each solar panel shall be thermal vacuum cycled to the limits below. The panel(s) shall be mounted in a low mass fixture which will provide minimum blockage of radiative paths to heat sinks. Cooling shall be by radiation/convection to a GN2 or LN2 shroud, in vacuum. Heating shall be radiative, directed on the cell side only and should be accomplished by low blockage tubular infrared lamps or equivalent. A uniformity tolerance of ±5 °C average shall apply at both maximum and minimum temperatures excluding any localized hot or cold areas. A cycle is defined as beginning at 25 °C, proceeding to minimum temperature, heating to maximum temperature and cooling to 25 °C.

If the vendor's standard product has not been tested to the expected temperature levels specified in paragraph 4.2.1, a qualification panel shall undergo additional thermal vacuum testing. The qualification panel shall be tested for thirteen (13) thermal vacuum cycles at protoflight levels specified in paragraph 7.2.5.5.1. The COR will determine if a qualification panel is needed based on information provided from the vendor of previous tests. The flight panels shall be tested for four (4) protoflight cycles specified in paragraph 7.2.5.5.1.

7.2.5.5.1 Protoflight Thermal Vacuum Cycling Limits

Protoflight level tests shall consist of N cycles to a maximum temperature of +105°C and a minimum temperature of -150°C as shown in Figure 5: Protoflight Thermal Vacuum Profile. A dwell time of 2 hours shall occur at each maximum and minimum temperature plateaus before continuing to the next cycle.

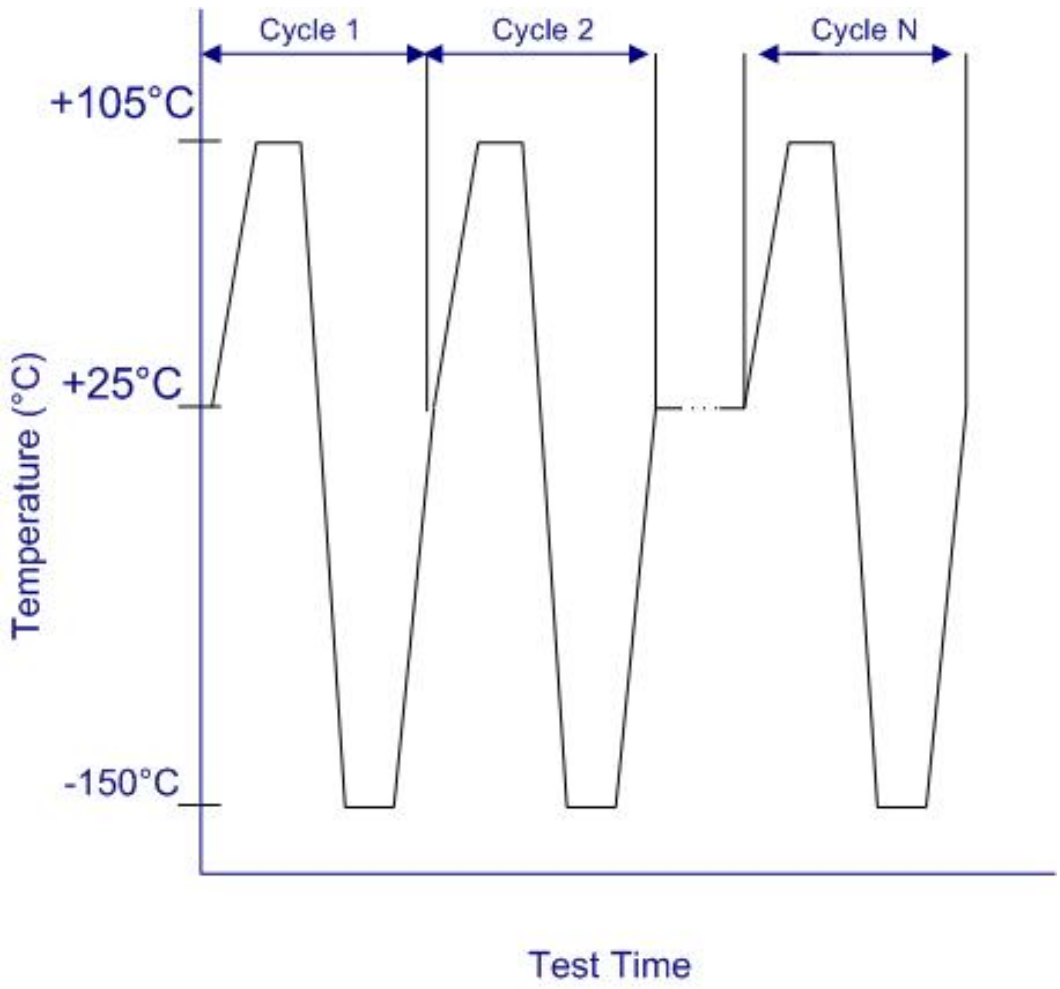

Figure 5: Protoflight Thermal Vacuum Profile

- 2 hour dwells at maximum and minimum temperatures
- All cycles have identical profiles

7.2.5.5.2 Qualification Panel

The qualification test panel shall be fabricated. The subcontractor shall perform solar cell laydown on the qualification test panel substrate using the same parts, materials, and processes as those used for the flight solar panels. The qualification panel substrate will be approximately TBD inches by TBD inches. The completed qualification solar panel shall include the following flight-configuration components:

a) One electrical interface connector.
b) One temperature sensor assembly on the back of the panel.
c) Two strings of solar cells, with 20 cells each per string.
d) At least one example of any other parts and materials planned for use on the flight panels (i.e. hinge).

The qualification panel solar cell circuit shall have equivalent or higher AM0 area power density than that required for the flight panel circuits. As described in this section, the qaulification panel will be subjected to thermal cycling and acoustic vibration testing.

7.2.5.6 Static Loads

Each solar array substrate shall be mounted to the vibration test fixture via the flight solar panel mounts. The substrate shall be loaded in each of the three mutually orthogonal axes, one at a time, in both the positive and negative directions. The load to be applied in each axis is listed in paragraph 4.1.1.

7.2.5.7 Spacecraft Array Proto-Flight Acoustic

The flight solar array panels will be subjected to the proto-flight acoustic test at the spacecraft level. The panels will be installed on the spacecraft in flight configuration. A 10 kHz system test spectrum shall be used. The test duration shall be one minute at the levels specified in paragraph 4.1.4.

If the vendor's standard product has not been tested to the expected acoustic levels specified in paragraph 4.2.1, a qualification panel shall undergo acoustic testing. The COR will determine if a qualification panel is needed based on information provided from the vendor of previous tests. The qualification panel test shall be tested at the levels specified in paragraph 4.1.4 for a duration of 1 minute.

7.2.5.8 Solar Array Proto-Flight Random Vibration

The flight solar array panels shall be subjected to the proto-flight random vibration test at the spacecraft level. The panels shall be installed on the spacecraft in flight configuration. A 15 to 200 Hz system test spectrum shall be used. The test duration shall be one minute per axis in all three axes at the levels specified in paragraph 4.1.2.

7.2.5.9 Spacecraft Pyrotechnic Shock

The flight soar arrays will be subjected to pyrotechnic shock testing by the procuring activity at the spacecraft level. The panels will be installed on the spacecraft in flight configuration.

7.2.5.10 Deployment Testing

The flight solar array panels shall undergo a full deployment testing at ambient temperatures. The procuring agency prefers that full deployment testing is conducted at the minimum and maximum deployment temperatures specified in paragraph 3.5.2. The full deployment test may be performed at atmospheric pressure and with an offloading fixture.

7.2.5.11 Torque Margin

The assembled flight solar array wings shall demonstrate their minimum torque margin required via testing. The basis of the test shall be jointly agreed upon between the vendor and procuring activity.

7.3 Verification Requirements Checklist

The analyses, tests, and inspections specified in this section will be conducted to verify that all requirements have been achieved.

7.3.1 Surveys, Audits, and Inspections

The customer reserves the right to perform QA surveys, audits and/or workmanship inspections to verify conformance to requirements, failure resolution or corrective actions.

7.4 Pre-Delivery Inspection

The supplier shall provide for a mandatory inspection by the customer QA representatives at an agreed-upon point in the fabrication process prior to start of acceptance testing for delivery. This inspection is to confirm level of workmanship and documentation compliance prior to start of acceptance test procedure.

Design Requirements	Verification Method				
	N/A	Analysis	Similarity	Inspection	Test
3.1 Overall Requirements	X				
3.1.1 Mission Events		X	X		
3.1.2 Mission Orbit		X			
3.2.3 Deployed Envelope		X			
3.2 Physical Characteristics	X				
3.2.1 Co-ordinate system				X	
3.2.2 Stowed Envelope		X		X	
3.2.3 Deployed Envelope		X			
3.2.4 Alignment		X	X		
3.2.5 Substrate				X	
3.2.6 Subsystem Mass					X
3.2.6.1 Moments of Inertia		X			
3.3 Electrical Performance	X				
3.3.1 Power Output	X				
3.3.1.1 Stowed Solar Array				X	
3.3.1.2 Deployed Solar Array					X
3.3.1.3 Solar Cell Strings					X
3.3.1.4 Solar Cells				X	
3.3.1.4.1 Solar Cell Off Pointing Angles	X				
3.3.1.4.2 Solar Cell Antireflective Coating				X	
3.3.1.5 Electrical Contacts				X	
3.3.1.6 Solder				X	
3.3.1.7 Coverglass Antireflective Coating				X	
3.3.1.8 Ultra-Violet Rejection		X			
3.3.1.9 Terminal Boards				X	
3.3.1.10 Blocking Diodes				X	
3.3.2 Electrical Continuity and Grounding		X	X		
3.3.2.1 Insulation Resistance					X
3.3.2.2 Substrate Surface Conductivity					X
3.3.2.3 Grounding				X	
3.3.3 Magnetic Moment Cancellation		X			
3.4 Structural Performance	X				
3.4.1 Stiffness		X			
3.4.2 Stowed Configuration		X			

Design Recommendations	Verification Method				
	N/A	Analysis	Similarity	Inspection	Test
3.4.3 Deployed Configuration		X			
3.5 Solar Array Deployment		X			
3.5.1 Deployment Commanding					X
3.5.2 Deployment Temperatures		X			X
3.5.3 Yoke				X	
3.5.4 Restraint Mechanism Assembly				X	
3.5.5 Deployment Kinematics		X		X	X
3.6 Thermal Performance				X	
3.7 Instrumentation	X				
3.7.1 Deployment indicator				X	
3.7.2 Temperature Sensors				X	
3.7.3 Sun Sensors				X	
3.8 Transportability	X				
3.9 Maintainability			X		
4 Design Requirements	X				
4.1 Non-Operating Environment	X				
4.1.1 Acceleration					X
4.1.2 Random Vibrations					X
4.1.3 Sine Survey					X
4.1.4 Acoustic					X
4.1.5 Pressure		X			X
4.1.6 Humidity			X		
4.1.7 Pyrotechnic Shock					X
4.2 Operating Environment	X				
4.2.1 Temperature					X
4.2.2 Pressure					X
4.2.3 Humidity			X		
4.2.4 Radiation		X			
4.2.5 Corona Suppression			X		
4.3 Design and Construction	X				
4.3.1 Materials Selection				X	
4.3.1.1 Fungus				X	

Design Recommendations	Verification Method				
	N/A	Analysis	Similarity	Inspection	Test
4.3.1.2 Prohibited Materials				X	
4.3.2 Adhesives				X	
4.3.3 Parts Selection				X	
4.3.3.1 Traceability	X				
4.3.4 Soldering and Other Processes				X	
4.3.5 Electrostatic Discharge Sensitive Parts				X	
4.3.6 Grounding and Shielding				X	
4.3.7 Finishes				X	
4.3.8 Nameplates and Product Marking				X	
4.4 Reliability	X				
4.4.1 Single Point Failures				X	
4.4.2 Failure Modes, Effects, and Criticality Analysis				X	
4.4.3 Electrical Parts Stress Analysis				X	
4.4.4 Failure Reporting and Corrective Action System				X	
4.4.5 Non-Conformance Reporting				X	
4.4.6 Workmanship				X	
4.4.6.1 Processes and Controls				X	
4.4.6.2 Control and Use of Nonconforming Material					
5 Interface Definition	X				
5.1 Structural/Mechanical Interfaces	X				
5.1.1 Physical				X	
5.1.2 SADA Interface - Deployed Configuration		X			
5.1.3 Yoke				X	
5.2 Thermal Interface	X				
5.2.1 Stowed Configuration	X				
5.2.2 Deployed Configuration	X				
5.2.3 Spacecraft Sidewall	X				
5.2.4 Restraint Hardware				X	
5.3 Electrical Interfaces	X				
5.3.1 Solar Array Drive Assembly (SADA)				X	X
5.3.2 Deployment Heaters & Deployment Thermistors				X	X
5.3.3 Release Mechanism(s)					X
5.3.4 Thermistors				X	X
5.3.5 Coarse Sun Sensors				X	X
5.3.6 Deployment Indicators					X

8 PREPARATION FOR DELIVERY

8.1 General

a.) Packaging for each unit for delivery shall prevent damage to the unit when subjected to the environments specified in Section 4.
b.) Preparations for delivery shall be in accordance with the government and the following:
c.) Provisions shall be made to assure all shipping containers are capable of protecting the hardware during all phases of transportation. Shipping containers shall be nonflammable, have all the required markings and labels and contain any provisions necessary for handling (i.e. forklift sleeves, lifting points, handles, etc.).
d.) Product protection shall be emphasized during all critical hardware handling and transportation.

8.2 Special Requirements

8.2.1 Special Instructions

Qualification panel and flight panels require special attention during receiving, inspection, installation, and operation. The procuring activity shall be notified under separate cover of the impending arrival of each of these articles. In addition, a removable instruction tag shall be attached to each shipping crate. As a minimum, the tag shall carry the following information statements printed in 1/2 inch or larger letters:

“SENSITIVE SPACECRAFT HARDWARE
DO NOT OPEN FOR RECEIVING INSPECTION. NOTIFY PAUL OPPENHEIMER (202) 767-0208"

8.2.2 Electrical Connectors

Connector savers or dust caps shall be used and delivered on all external electrical connectors. Caps used shall be friction fit or threaded types which do not require tape or a mechanical device to secure.

8.3 Detailed Preparation

8.3.1 Preservation and Packaging

Packaging shall maintain the unit clean to class 1000.

8.3.2 Packing

The contractor shall write a procedure for packaging of the panels.

8.3.2.1 Attaching Parts

Any attaching parts such as nuts, bolts, washers, etc., which must accompany the unit, shall be preserved, bagged, appropriately identified, and securely attached to or adjacent to the fitting for which intended. These parts shall be properly protected in a bag to prevent damage to themselves and to the unit.

8.3.2.2 Containers

Individual containers shall be constructed from non-crushable, light weight material and shall allow for removal of the article for inspection without destruction of the container so that the container can be used for storage of the article. The container shall also include restraints that will prevent article movement inside the container.

8.3.2.3 Panel Container

The contractor shall design and have constructed a container that will hold a reasonable number of flight solar panels.

8.3.2.4 Panel Container Identification

Identification and marking of the unit shall be in accordance with MIL-STD- 129L and limited to the following information:

a.) Part number
b.) Approved nomenclature
c.) Serial number

8.3.2.5 Panel Container Bagging

Each individual container shall be placed in a heat-resealable, anti-static plastic bag with desiccant and a humidity indicator card. The desiccant shall be bagged silica-gel and shall meet the requirements of MIL-STD-1367. The humidity indicator card shall have a minimum of three humidity indicating spots over the range of 50% to 100% relative humidity. The heat resealable bag shall be a minimum of 0.006 inch thick and large enough to allow for a minimum of six (6) resealings.

8.3.2.6 Shipping Crates

The contractor shall design a wooden shipping crate that will hold several panel containers and provide protection against the environments specified in section 4. The shipping crate design, the number of crates, and the number of containers to be placed in each shipping crate shall be mutually agreed upon by the procuring activity and the contractor.

8.3.2.7 Handling Fixtures

The contractor shall provide any handling fixtures or equipment need to remove the panels from the shipping containers.

8.3.3 Method of Shipment

The solar arrays shall be shipped through a next day carrier.

9 NOTES

9.1 Definitions

9.1.1 Supplier

A supplier shall be an organization awarded a contract to provide the equipment to the procuring activity.

9.1.2 Procuring Activity

The procuring activity shall be the Government.

9.1.3 User

The user shall be the Government.

9.1.4 Flight Hardware

Flight hardware is hardware fabricated and inspected to procuring activity approved flight drawings, identical in performance, configuration, and fabrication to the article to be qualified, as applicable.

9.1.5 Interchangeable Items

Interchangeable items exist when two or more items possess such functional and physical characteristics as to be equivalent in performance and durability and are capable of being exchanged one for the other without alteration of the items themselves or of adjoining items except for adjustment, and without selection for fit or performance.

9.1.6 Replacement Item

A replacement item is an item that is functionally interchangeable with another item, but that differs physically from the original part in that the installation of the replacement part requires operations such as drilling, reaming, cutting, filing, shimming, etc., in addition to the normal applications and methods of attachment.

9.1.7 Part

A part is one piece or two or more pieces joined together that are not normally subject to disassembly without destruction of designed use.

9.1.8 Device

A device consists of electromechanical items that perform a specific function. A device is intermediate in complexity between piece parts and components. Examples of devices include valves, small assemblies, relays, gyros, connectors, batteries, and shaft encoders.

9.1.9 Component

A component is a combination of parts, devices and structures, usually self-contained, which perform a distinctive function in the operation of the overall equipment (e.g., a "black box").

9.1.10 Cycle

A cycle (e.g., thermal vacuum testing) shall be defined as the transition from a nominal to a positive or negative extreme, and the transition to the opposite extreme and back to nominal.

9.2 Deviations

Deviations from this specification shall be allowed only by written authorization from the procuring activity and shall be followed by a revision to this specification.

9.3 Acronyms and Abbreviations

AM0	Air Mass Zero
ARO	After Receipt of Order
AWG	American Wire Gauge
BOE	Beginning of Life
CAGE	Commercial and Government Entity
CDE	Command and Data Electronics
CDR	Critical Design Review
CDRL	Contract Data Requirements List
COR	Contracting Officer's Representative
CVCM	Collected Volatile Condensable Material
EEE	Electrical, Electronic, and Electromechanical
EMC	Electromagnetic Compatibility
EOL	End of Life
FMEA	Failure Mode and Effect Analysis
FQT	Formal Qualification Test
FRACAS	Failure Reporting and Corrective Action System
GFE	Government Furnished Equipment
GFM	Government Furnished Material
Isc	Short Circuit Current
MAC	Mass Acceleration Curve
MOCVD	Metallic Organic Vapor Deposition
NCST	Naval Center for Space Technology
NRL	Naval Research Laboratory
PCB	Printed Circuit Boards PDR Preliminary Design Review
PRR	Production Readiness Review
PMP	Parts, Materials, and Processes
QA	Quality Assurance
RAD	Radiation Absorbed Dosage
SADA	Solar Array Drive Assembly
SADM	Solar Array Drive Mechanism
S/C	Spacecraft
TBD	To Be Determined
TBR	To Be Revised
TML	Total Mass Loss
TVAC	Thermal Vacuum
torr	A unit of pressure measurement equal to 1/760 atmosphere
U-V	Ultra-Violet
Voc	Open Circuit Voltage