# TECHNICAL SPECIFICATIONS
**for**
**TRAVELING WAVE TUBE AMPLIFIERS**
**to be used in the**
**CENTRAL TARGET SIMULATOR FACILITY**

## 1.0 INTRODUCTION

1.1 The contractor shall provide the Naval Research Laboratory (NRL) with a lot of 12 Traveling Wave Tube Amplifiers (TWTAs) and related equipment according to the following specifications, which define the electrical, mechanical, environmental, performance and test requirements. These TWTAs will replace aging units currently in use in the Central Target Simulator (CTS) Facility. The electrical specifications are driven by simulation requirements; the mechanical specifications are designed to permit relatively easy replacement of the existing amplifiers without significant modifications to the Facility.

1.2 The TWTAs are used to amplify RF signals in a simulation environment that generates a virtual target accurately positioned between four antennas by equalizing the relative phase and balancing the power ratio between the antennas. Overall power is the sum of the individual RF vectors. The amplitude and phase must track closely over any 100 MHz segment to maintain constant angular positions when using multiple frequency type applications.

## 2.0 MECHANICAL SPECIFICATIONS

2.1 The TWTA enclosure must utilize an EIA-310 standard 19-inch rack-mounting format. Front panel height must be no more than 5¼ inches (3U) and total length (exclusive of connectors and switches) must not exceed 20¼ inches (see Figure 1).

2.2 Each TWTA unit must weigh no more than fifty (50) pounds.

2.3 The TWTA must be provided with rack slides that allow the unit to be fully extended in front of the rack after RF and electrical connections have been removed. The rack slides must be readily mountable in the existing equipment racks without modification to either the new slides or the racks (see Figure 2).

2.4 The contractor shall provide a method for grounding the TWTAs to the equipment rack (NRL approval required).

2.5 Input and output RF connectors, as well as the RF sample port, must be female type SMA and must be mounted on the rear panel in accordance with Figure 3. They must be mounted to the chassis in such a way as to prevent rotating in place or loosening after repeated connections being made and broken.

2.6 The multi-pin connector, providing status signals and the interlock interface, must be female type DE-9S or equivalent, and must be mounted on the rear panel in accordance with Figure 3.

2.7 No paint must be applied to surfaces used for any electrical contact.

2.8 Each TWTA must be self contained with an internal power supply and cooling system.

2.9 Each TWTA must be equipped with handles mounted on the front panel to facilitate installation and removal of the unit.

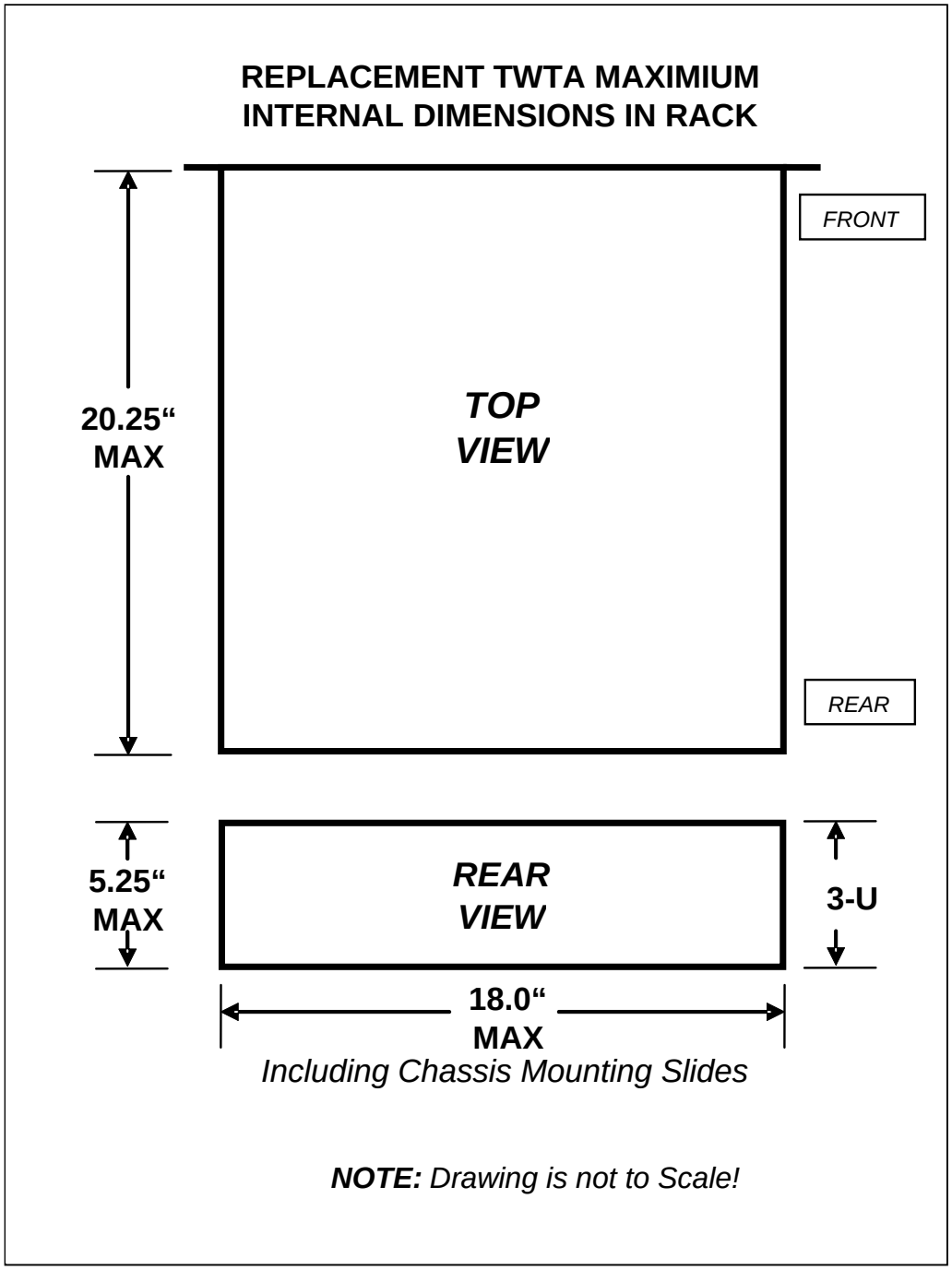


**Figure 1 – Maximum TWTA Dimensions**

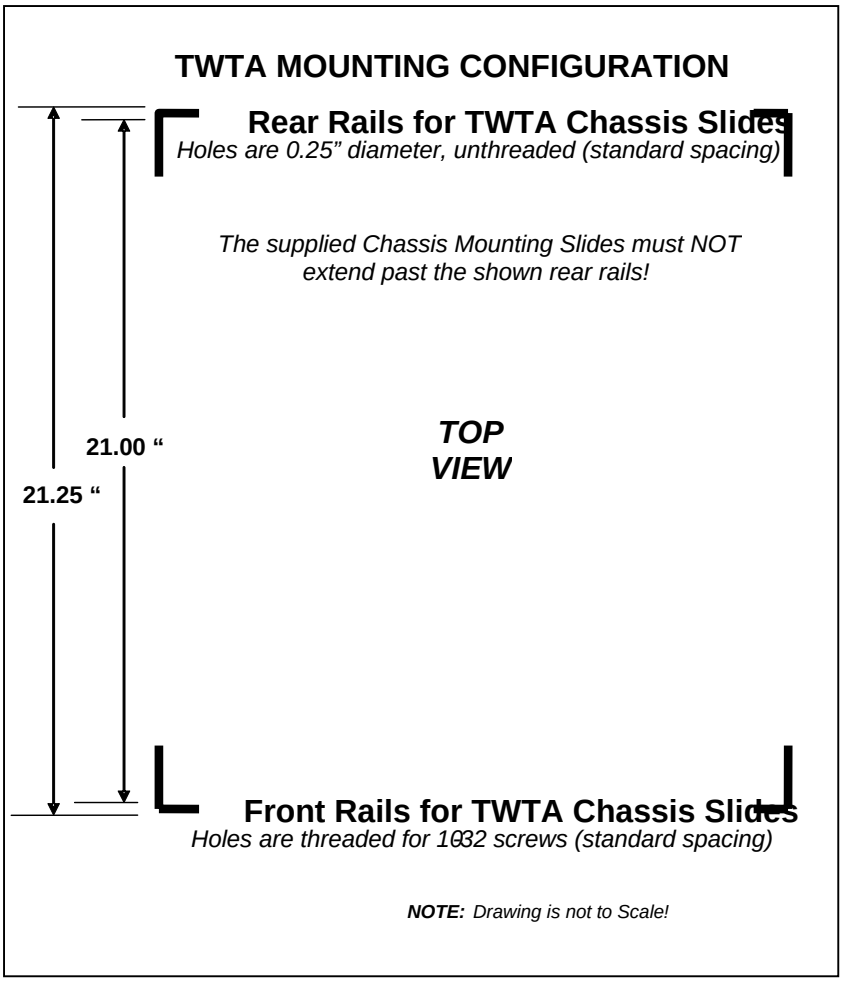


**Figure 2 – TWTA Mounting Configuration**

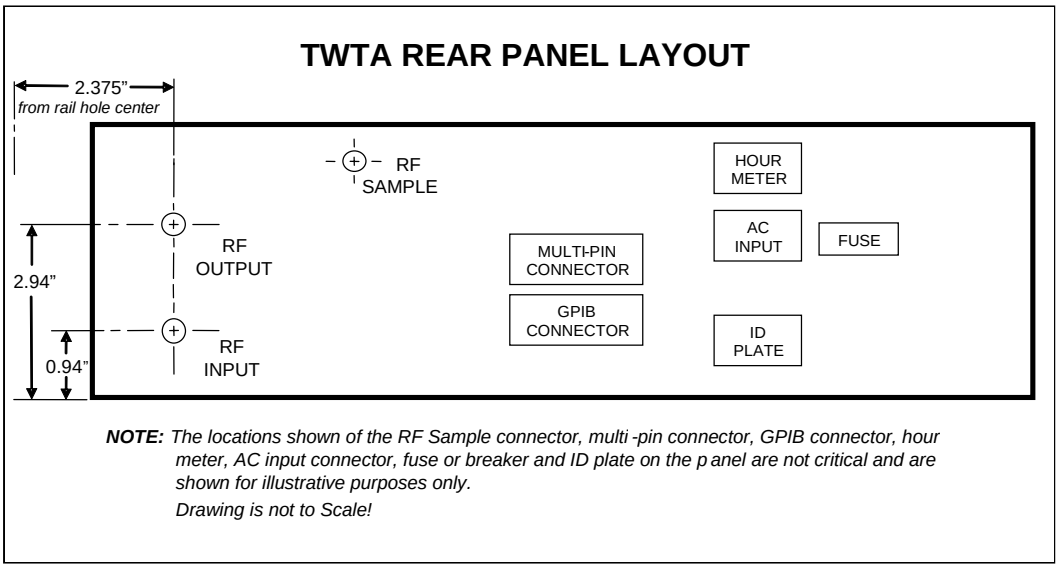


**Figure 3 – TWTA Rear Panel Layout**

## 3.0 ELECTRICAL SPECIFICATIONS

3.1 Electrical performance specifications for the TWTAs are specified in Table 1 and in the remaining paragraphs of this section.

| Parameter | Value |
|---|---|
| Frequency range | 8.0 to 18.0 GHz |
| Small signal gain | 33 dB minimum across operating band (see Figure 4) |
| Output power | +43 dBm (20 watts), minimum, at 1 dB compression point over entire frequency range |
| Pulse Response | 90% - 110% of final power within 20 ns |
| Small signal gain track across operating band, all units | 2.5 dB (see Figure 4) |
| Fine grain gain ripple | ±1.0 dB Max over any 100 MHz segment from the nominal gain |
| Small signal phase track across operating band, all units | ±30 degrees or less at same power level, 2 watts, max |
| Fine grain phase ripple | ±5 degrees over any 100 MHz band |
| Spurious output (except harmonics) | 50 dB below max power |
| AM and PM modulation 1 kHz bandwidth measured 1 kHz to 10 MHz from the carrier | -50 dBc |
| Noise Figure measured in a 10 MHz bandwidth | 35 dB max |
| Maximum noise power measured in a 1 MHz bandwidth | -30 dBm |
| Input and Output VSWR (referenced to 50 ohms) | Maximum of 1.75:1 |
| RF input and output impedance | 50 ohms, nominal |
| Reflected power protection | Full power |
| Prime power | Single phase, 120 volts (±10%), 60 Hz (±3 %); a 4 foot (or longer) prime power cable must be supplied with each TWTA unit |

| Parameter | Value |
|---|---|
| EMI<br>• on control leads<br>• 1 meter from unit | <br>-50 dBc<br>-80 dB rated power |

**Table 1 – TWTA Specifications**

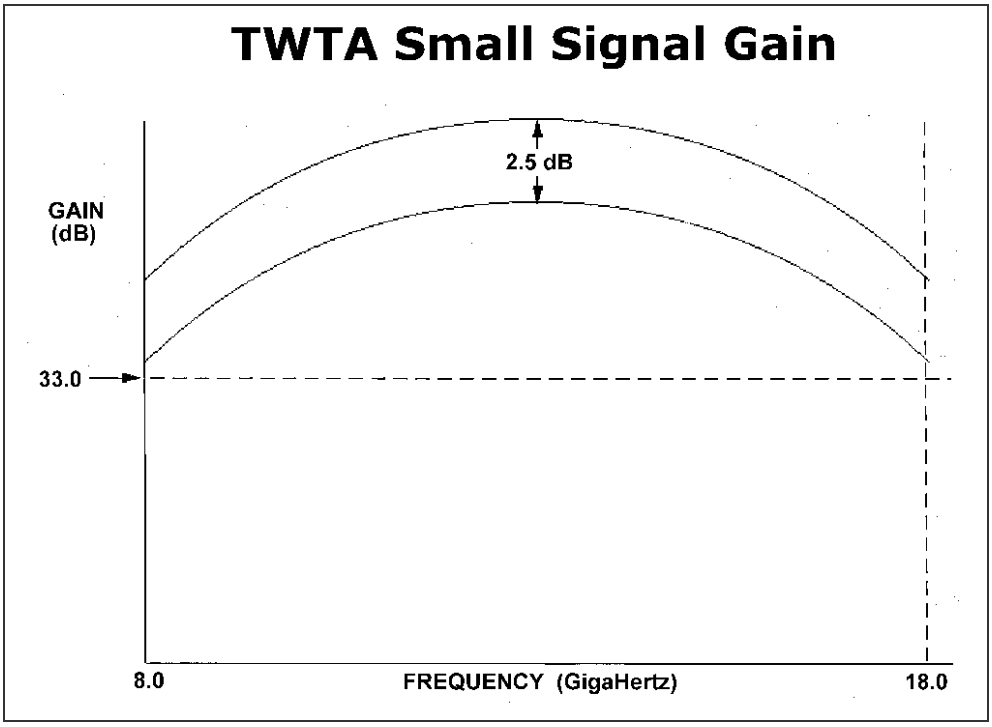


**Figure 4 – TWTA Small Signal Gain Specification**

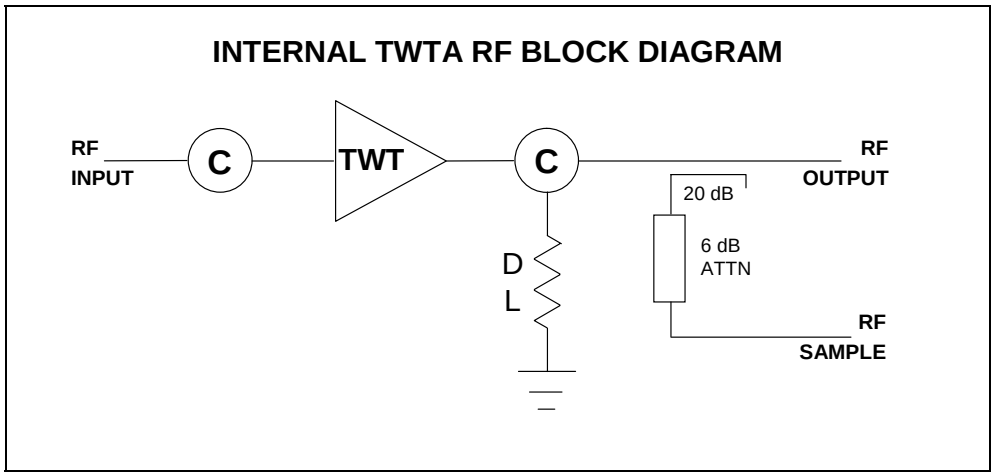


**Figure 5 – RF Block Diagram**

3.2 Each TWT must be protected by circulators installed in both the input and output transmission lines, in accordance with Figure 5. Additionally, a 20 dB coupler inserted into the output line, with a 6 dB attenuator on the coupled output, must provide a sample of the RF output at the rear panel (see Paragraph 2.5).

3.3 AM ripple (unit-to-unit) due to the power supply must be less than ± 0.7 dB. In order to achieve this aspect of the specification, the contractor may synchronize the power supplies of the individual TWTAs to a master TWTA. Any unit must be able to serve as a master.

3.4 The TWTA units must withstand prime power interruptions without damage.

3.5 Sufficient protection must be provided, such as interlocks, filament time delay, fusing, temperature sensing, etc., in order to protect the equipment from premature or unrecoverable failure.

3.6 During the filament time-out, the TWTA must prevent the application of high voltage to the TWT. When the filament time delay has expired, the TWTA must automatically enter the STANDBY mode.

3.7 The TWTA must accept an external input signal, in the form of a contact opening, that will force the TWTA into the STANDBY mode to prevent further transmission from the TWT within 40 ms. The TWTA must require manual action to reset to normal RF ON Mode, and must not reset automatically. Further details on the status and interlock connector are described below in Table 2.

| **TWTA** | | | **CTS** | |
|---|---|---|---|---|
| **Function** | **Circuit** | **DB-9F Connector** | **Circuit** | **Function** |
| **STATUS** [1] **'RF ON'** | **Normally Open Contact Closure** | **1** | *Optoisolator Circuit* | **Status Monitor 'RF ON'** |
| | | **2** | | |
| | | **3** | | |
| | | **4** | | |
| | | **5** | | |
| **STATUS** [1] **'STANDBY'** | **Normally Open Contact Closure** | **6** | *Optoisolator Circuit* | **Status Monitor 'STANDBY'** |
| | | **7** | | |
| **RF INTERLOCK** [2] | Contractor Specified Circuit | **8** | **Normally Open Contact Closure** | **'RF ON' when Closed** |
| | | **9** | | |
| [1] All **STATUS** connections must supply an isolated contact closure (closed indicates 'TRUE' Status) | | | | |
| [2] **INTERLOCK** must accept an isolated contact closure (external contact closed to allow for 'RF ON') | | | | |

**Table 2 – CTS Status and Interlock Connector**

3.8 The TWTA must maintain maximum power at the output with the correct CW RF input drive power indefinitely.

3.9 The TWTA must be capable of continuous operation in RF ON mode indefinitely.

3.10 The TWTA must be capable of continuous operation with no RF drive indefinitely.

3.11 The contractor shall keep a reference device or test data sufficient to accomplish performance match for any new RF units that NRL may order to this specification within the next 10 years.

## 4.0 CONTROLS/DISPLAYS

4.1 All controls and displays must be located on the front panel. As a minimum, the following controls and operating modes must be provided (see Table 3). A display must indicate current status and confirm the mode selected.

| Control | Function | Mode |
|---|---|---|
| Line Power | Controls the application of AC power to the unit and illuminates an indicator to show that AC power is available to the amplifier. | POWER ON |
| Power On | Controls the application of filament power to the TWT, initiates timing circuitry and illuminates an indicator to show that the countdown process to STANDBY Mode is in progress. | POWER ON COUNTDOWN TO STANDBY |
| RF Off | Controls the removal of high voltage from the TWT, except for the filament and illuminates an indicator to show that the unit is in STANDBY Mode. | STANDBY |
| RF On | Controls the application of the high voltage to the TWT and illuminates an indicator to show that the Unit is in RF ON Mode. | RF ON |
| Power Off | Controls the removal of all power from the TWT and resets the warm-up timer. All indicators (except POWER ON) are dark. | POWER OFF |

**Table 3**

4.2 Front panel controls for the display of specific TWT conditions must be provided. The information in Table 4 must be displayed for the corresponding function.

| Measurement | Function |
|---|---|
| Helix Current | Displays the actual TWT helix current (in milliamps) |
| Helix Voltage | Displays the actual TWT cathode (helix) voltage with respect to ground |
| Collector Voltage | Displays the actual TWT collector voltage with respect to ground |

**Table 4**

4.3 Each unit must have a main AC input power circuit breaker or fuse accessible from the outside rear panel.

4.4 Each TWTA must be equipped with an external elapsed time meter on the rear or front panel to indicate the total hours of operation.

4.5 Each TWTA must display the specific fault within the unit that prevents normal operation; such as excess helix current, collector current, interlock, high SWR, excessive temperature, etc.

## 5.0 OPERATING STATUS AND INTERLOCK REQUIREMENTS

5.1 Status signals for the conditions in Table 5 must be made available for remote monitoring, at the rear panel of the unit (also see Table 2).

| Condition | Signal Type |
|---|---|
| RF ON | Contact Closure |
| STANDBY | Contact Closure |

**Table 5**

5.2 Interlock Requirements – The TWTA must operate in normal transmit mode only if the unit detects an external contact closure. The unit must revert to or remain in the STANDBY mode when this condition is not fulfilled (also see Table 2).

## 6.0 ENVIRONMENTAL REQUIREMENTS

6.1 The units must meet the environmental requirements necessary to operate within an indoor conventional equipment rack with vertical airflow. Input air temperature is 55 to 95 degrees Fahrenheit. Humidity is less than 90%.

## 7.0 GPIB REMOTE CONTROL AND STATUS

7.1 Certain front panel controls and status information must also be remotely commanded or read over a standard GPIB (IEEE Standard 488.2) Interface. A standard GPIB connector must be located on the rear panel for this purpose. An indicator on the front panel must show that the TWTA unit is ready to receive remote commands. GPIB Address selection must be via switches on the rear or front panel. Any status change caused by a remote GPIB command must also appear on the front panel's status display (see Table 3).

7.2 As a minimum, the controls listed in Table 6 must be available via GPIB.

| Control | Function |
|---|---|
| RF OFF | Controls the removal of high voltage from the TWT, except for the filament and illuminates a front panel indicator to show that the Unit is in STANDBY Mode. |
| RF ON | Controls the application of the high voltage to the TWT and illuminates a front panel indicator to show that the Unit is in RF ON Mode. |

**Table 6**

7.3 As a minimum, the status listed in Table 7 must be available to be read via GPIB.

| Status | Function |
|---|---|
| STANDBY | High voltage is not applied to the TWT but the TWT filament is warmed-up. |
| RF ON | High voltage is being applied to the TWT. |

**Table 7**

## 8.0 MARKING

8.1 The units must be permanently marked with model and serial number, frequency band, RF input and output connectors, and any necessary caution or warning labels.

## 9.0 INTERCHANGEABILITY

9.1 All units, or replaceable components supplied in compliance with this specification must be electrically and mechanically interchangeable. This includes phase matched RF sections.

## 10.0 PRE-DELIVERY FACTORY TESTING AND NRL ACCEPTANCE TESTING

10.1 The contractor shall thoroughly bench test all units and supply the following factory test data to NRL for review. Delivery must commence only after NRL has determined (from the supplied test data) that the TWTAs are in compliance with this specification.

10.1.1 Maximum power, including 1 dB compression points, for all TWTA units from 8 to 18 GHz

10.1.2 Relative phase tracking to a reference TWT RF assembly, from 8 to 18 GHz at 2 watts output with accuracy of 2 degrees.

10.1.3 Gain of TWTA units: 8 to 18 GHz with accuracy to within 1/2 dB.

10.2 After receipt of the lot of 12 TWTAs at NRL, the government will have a period of 30 days to perform acceptance testing on the units. Any units not in compliance with this specification will be returned to the contractor, at the contractor's expense, for rework. The terms of the contract will be deemed as having been met when the lot of 12 TWTAs, factory test data and documentation (see Section 15, below) have all been accepted by NRL.

## 11.0 CERTIFICATE OF COMPLIANCE

11.1 A Certificate of Compliance must be supplied guaranteeing that all the requirements of this specification have been met.

## 12.0 WARRANTY

12.1 The lot of 12 TWTAs must be provided with a standard commercial warranty offered by the contractor starting from the date of acceptance (see Paragraph 10.2), covering all aspects of the amplifiers.

## 13.0 PACKAGING

13.1 Units must be preserved and packaged to provide adequate protection against corrosion, deterioration and physical damage during shipment from the contractor to the NRL.

## 14.0 CONTRACTOR PLANT VISIT

14.1 NRL reserves the right to visit the contractor's plant to inspect or witness any phase of the assembly, testing or packaging of units supplied in compliance with this specification.

## 15.0 DOCUMENTATION

15.1 Documentation accompanying the shipment must include the following items.

15.1.1 General description with block diagrams of how the TWTA is configured and operates.

15.1.2 A description of operating procedures and precautions.

15.1.3 Detailed schematic diagrams for all modules.

15.1.4 Layout diagram identifying the individual components.

15.1.5 Description of troubleshooting and repair procedures using routine lab equipment.

15.1.6 Documentation must be supplied on a CD-ROM computer disk and must consist of one or more *Adobe*® *Acrobat*® (*.pdf) files. Two (2) paper copies of all documentation will also be provided.

## 16.0 ACCEPTANCE TESTING

16.1 NRL reserves the right to reject any unit or component within thirty (30) days of delivery if it does not meet the requirements of this specification. The contractor will then be expected to repair (or replace) the rejected item(s) so that the specification is met.

## 17.0 OPTIONAL EXTENDED WARRANTY

Starting from the date of the expiation of the initial commercial warranty, the contractor shall quote the price for any standard commercial optional warranty periods.