Naval Research Laboratory's ESCALab MK II System

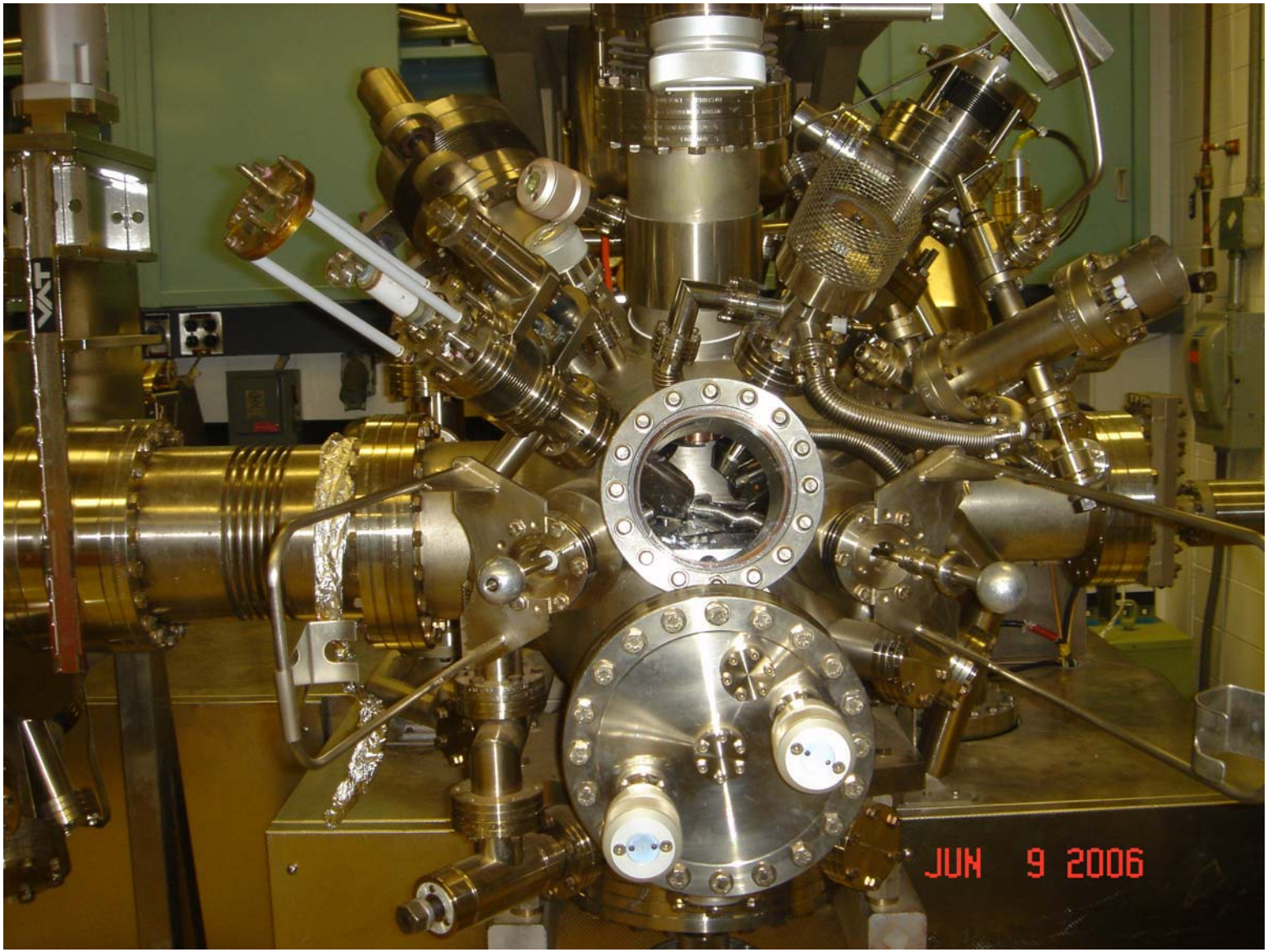

Front View

Naval Research Laboratory's ESCALab MK II System

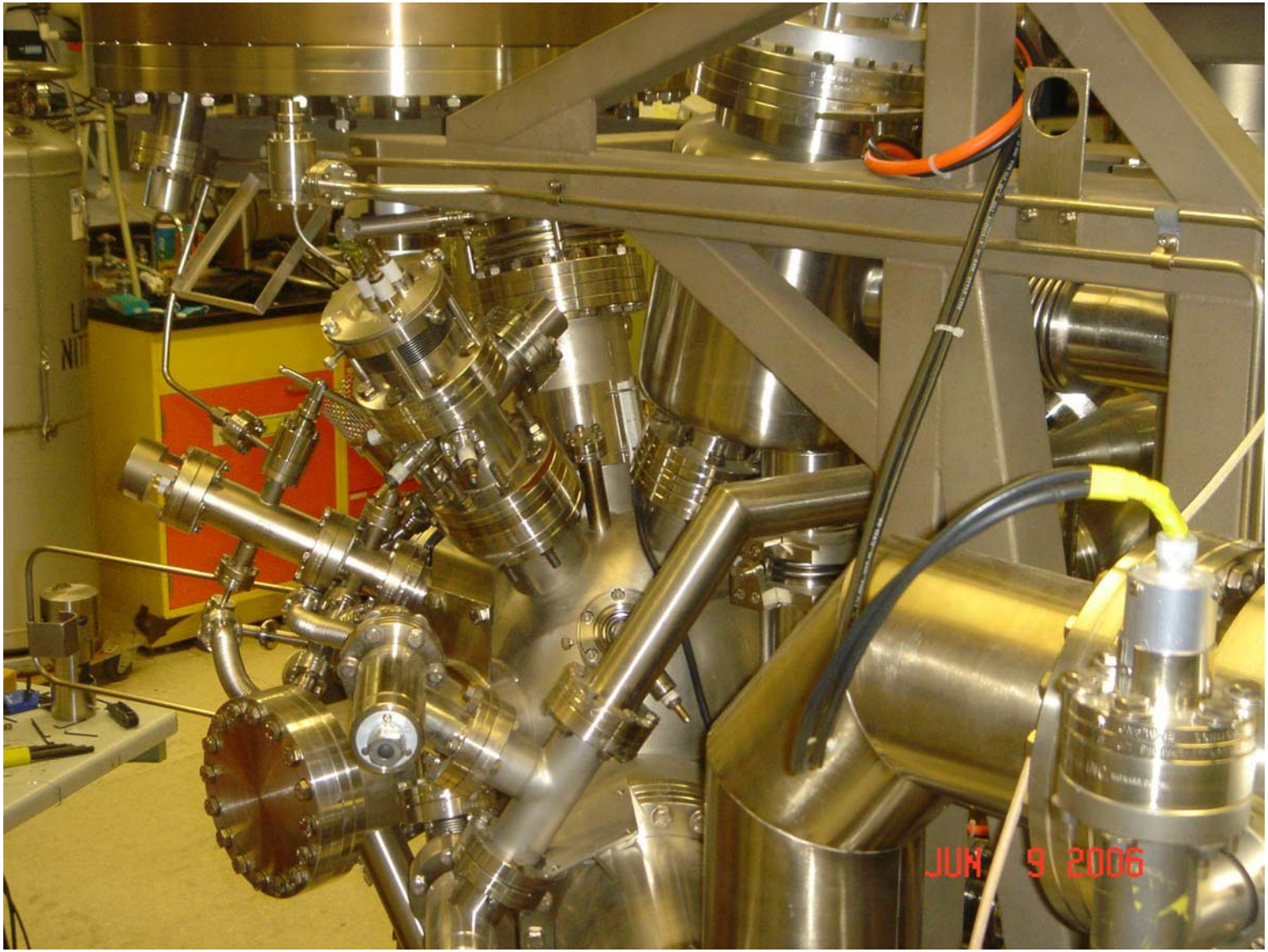

Side/Back View

Naval Research Laboratory's ESCALab MK II System

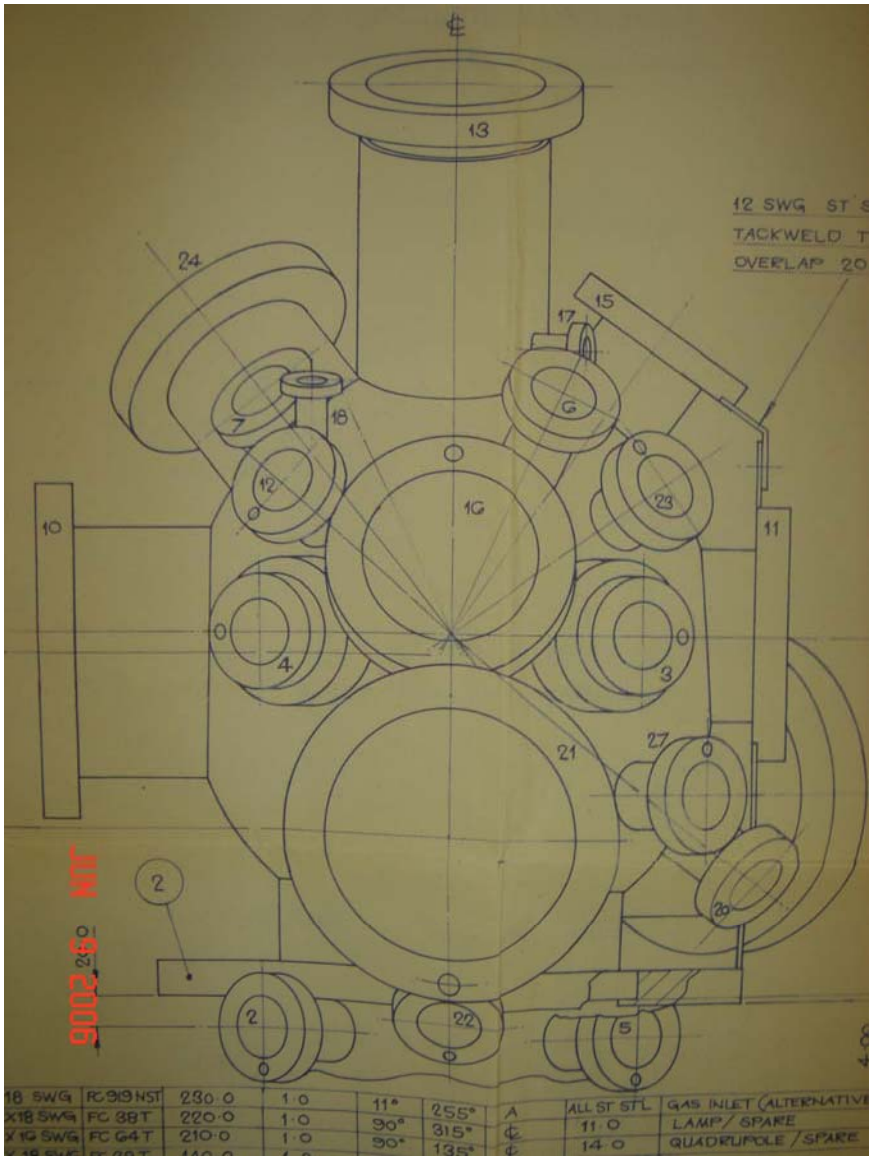

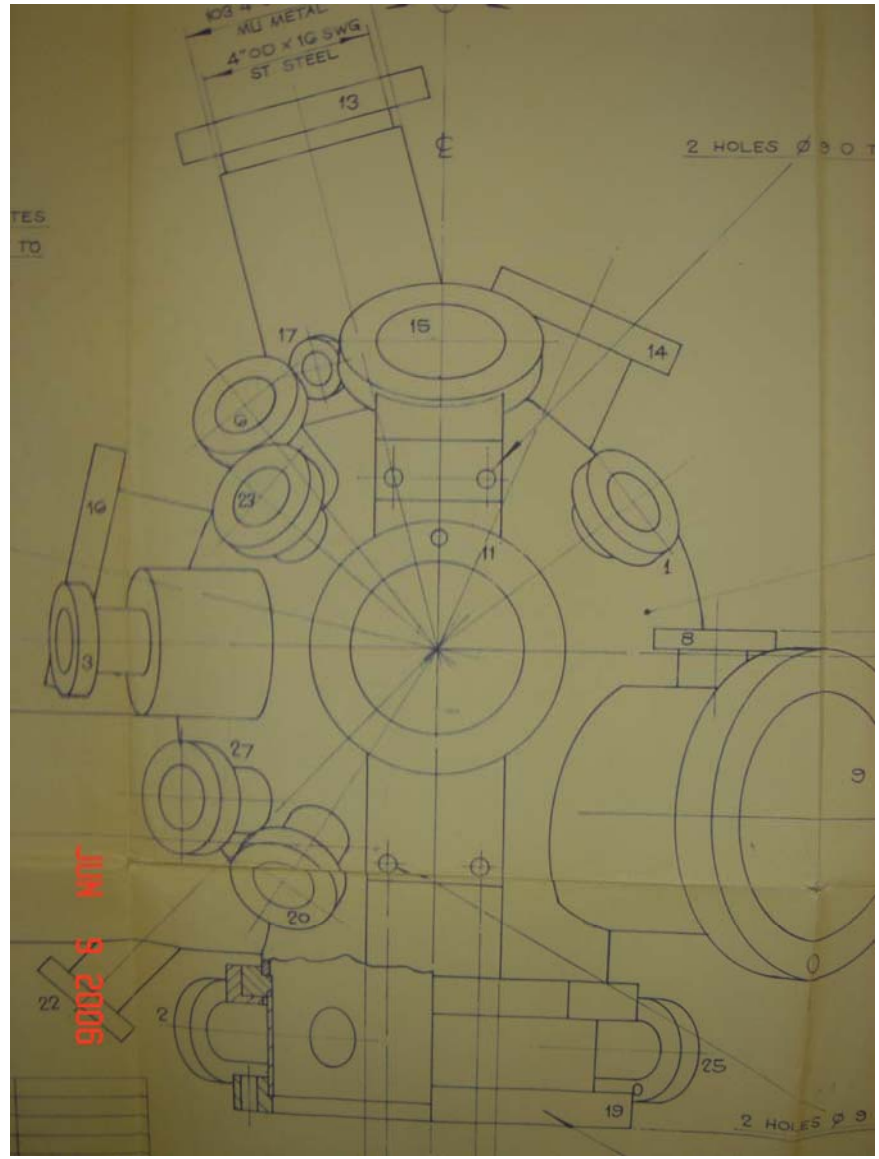

Front and Side View Drawings (not to scale)

Naval Research Laboratory's ESCALab MK II System

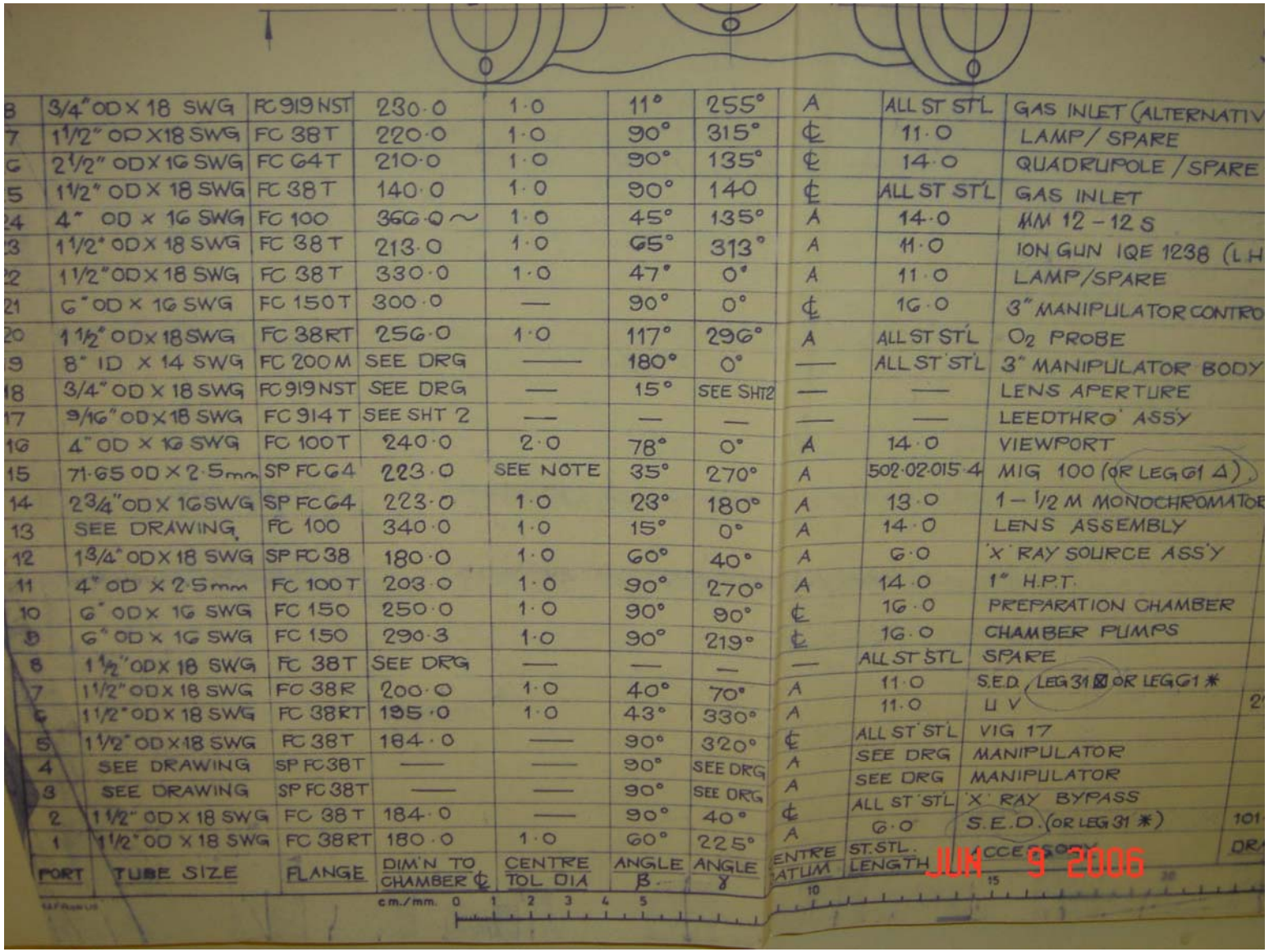

PORT	TUBE SIZE	FLANGE	DIM'N TO CHAMBER ℄	CENTRE TOL DIA	ANGLE β	ANGLE γ	CENTRE DATUM	ST.STL. LENGTH	ACCESSORY	
8	3/4" OD X 18 SWG	FC 919 NST	230·0	1·0	11°	255°	A	ALL ST ST'L	GAS INLET (ALTERNATIV	
7	1 1/2" OD X 18 SWG	FC 38 T	220·0	1·0	90°	315°	℄	11·0	LAMP / SPARE	
6	2 1/2" OD X 16 SWG	FC 64 T	210·0	1·0	90°	135°	℄	14·0	QUADRUPOLE / SPARE	
5	1 1/2" OD X 18 SWG	FC 38 T	140·0	1·0	90°	140	℄	ALL ST ST'L	GAS INLET	
4	4" OD X 16 SWG	FC 100	366·0 ~	1·0	45°	135°	A	14·0	MM 12 – 12 S	
3	1 1/2" OD X 18 SWG	FC 38 T	213·0	1·0	65°	313°	A	11·0	ION GUN IQE 1238 (L.H	
2	1 1/2" OD X 18 SWG	FC 38 T	330·0	1·0	47°	0°	A	11·0	LAMP/SPARE	
21	6" OD X 16 SWG	FC 150 T	300·0	—	90°	0°	℄	16·0	3" MANIPULATOR CONTRO	
20	1 1/2" OD X 18 SWG	FC 38 RT	256·0	1·0	117°	296°	A	ALL ST ST'L	O_2 PROBE	
9	8" ID X 14 SWG	FC 200 M	SEE DRG	—	180°	0°	—	ALL ST ST'L	3" MANIPULATOR BODY	
18	3/4" OD X 18 SWG	FC 919 NST	SEE DRG	—	15°	SEE SHT 2	—	—	LENS APERTURE	
17	9/16" OD X 18 SWG	FC 914 T	SEE SHT 2	—	—	—	—	—	LEEDTHRO' ASS'Y	
16	4" OD X 16 SWG	FC 100 T	240·0	2·0	78°	0°	A	14·0	VIEWPORT	
15	71·65 OD X 2·5mm	SP FC 64	223·0	SEE NOTE	35°	270°	A	502·02·015·4	MIG 100 (OR LEG 61 Δ)	
14	2 3/4" OD X 16 SWG	SP FC 64	223·0	1·0	23°	180°	A	13·0	1 – 1/2 M MONOCHROMATOR	
13	SEE DRAWING	FC 100	340·0	1·0	15°	0°	A	14·0	LENS ASSEMBLY	
12	1 3/4" OD X 18 SWG	SP FC 38	180·0	1·0	60°	40°	A	6·0	'X' RAY SOURCE ASS'Y	
11	4" OD X 2·5mm	FC 100 T	203·0	1·0	90°	270°	A	14·0	1" H.P.T.	
10	6" OD X 16 SWG	FC 150	250·0	1·0	90°	90°	℄	16·0	PREPARATION CHAMBER	
19	6" OD X 16 SWG	FC 150	290·3	1·0	90°	219°	℄	16·0	CHAMBER PUMPS	
8	1 1/2" OD X 18 SWG	FC 38 T	SEE DRG	—	—	—	—	ALL ST ST'L	SPARE	
7	1 1/2" OD X 18 SWG	FC 38 R	200·0	1·0	40°	70°	A	11·0	S.E.D. (LEG 31 ⊠ OR LEG 61 ✱)	
6	1 1/2" OD X 18 SWG	FC 38 RT	195·0	1·0	43°	330°	A	11·0	U V	2
5	1 1/2" OD X 18 SWG	FC 38 T	184·0	—	90°	320°	℄	ALL ST ST'L	VIG 17	
4	SEE DRAWING	SP FC 38 T	—	—	90°	SEE DRG	A	SEE DRG	MANIPULATOR	
3	SEE DRAWING	SP FC 38 T	—	—	90°	SEE DRG	A	SEE DRG	MANIPULATOR	
2	1 1/2" OD X 18 SWG	FC 38 T	184·0	—	90°	40°	℄	ALL ST ST'L	'X' RAY BYPASS	
1	1 1/2" OD X 18 SWG	FC 38 RT	180·0	1·0	60°	225°	A	6·0	S.E.D. (OR LEG 31 ✱)	101

JUN 9 2006

Listing of Flanges

Naval Research Laboratory's ESCALab MK II System

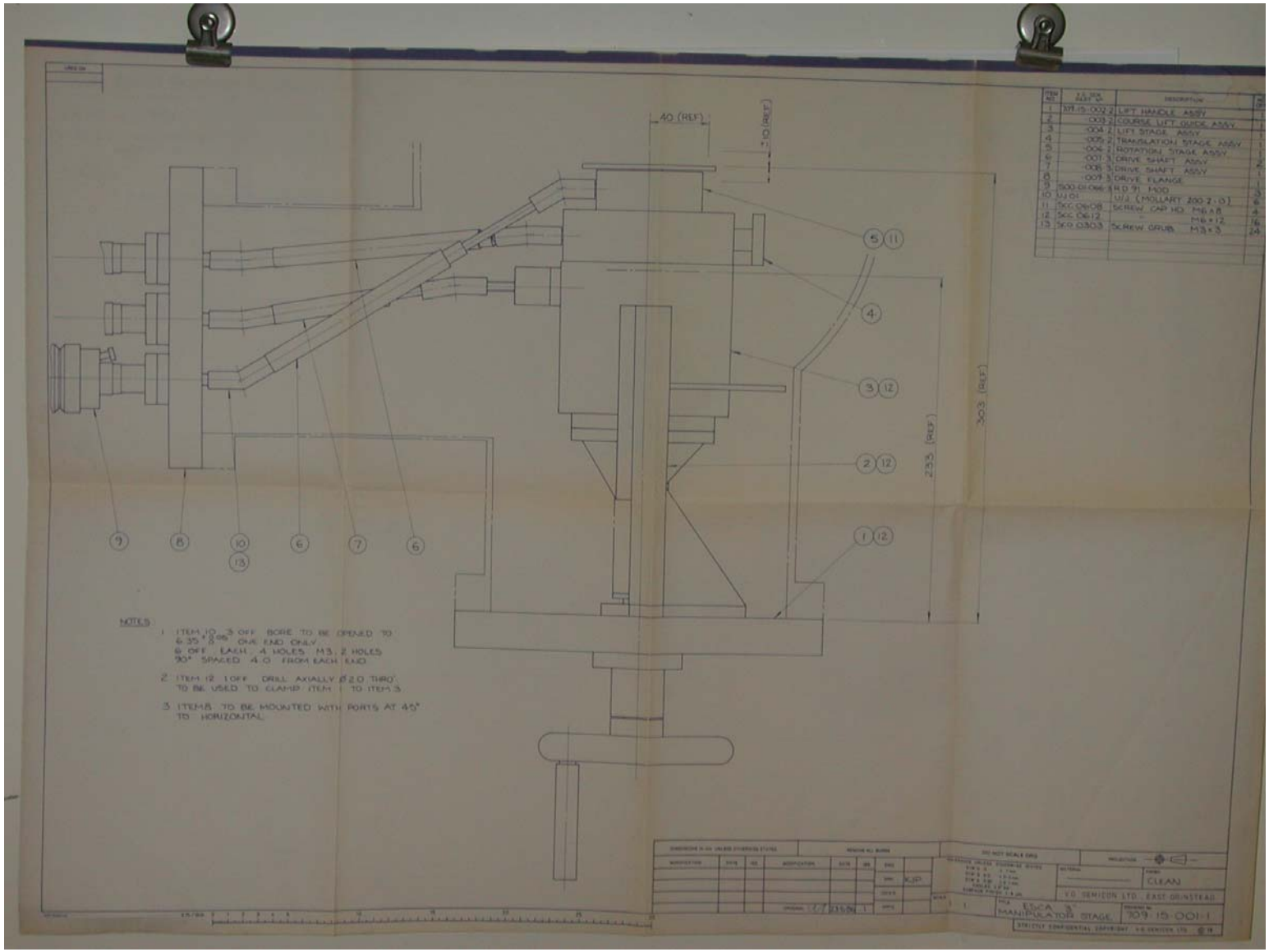

ESCA Sample Stage Drawing Side View (not to scale)

Naval Research Laboratory's ESCALab MK II System

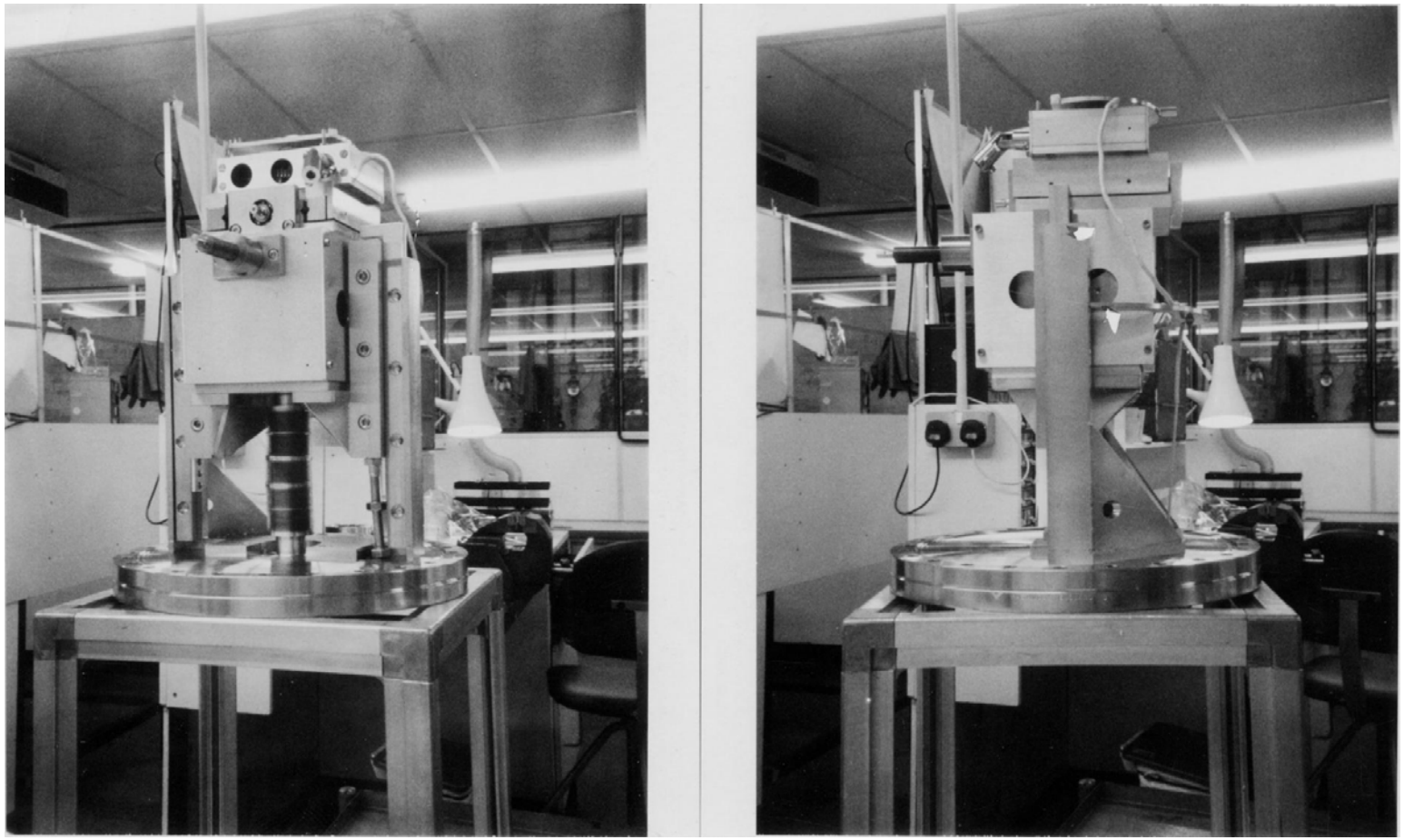

ESCA Sample Stage Front and Side View