AMENDMENT OF SOLICITATION/MODIFICATION OF CONTRACT

1. CONTRACT ID CODE		PAGE 1	OF PAGES 3
2. AMENDMENT/MODIFICAITON NO. 0001	3. EFFECTIVE DATE 04/09/07	4. REQUISITION/PURCHASE REQ. NO. 56-9309-07	5. PROJECT NO. (If applicble)
6. ISSUED BY CODE N00173		7. ADMINISTERED BY (If other than Item 6) CODE	

NAVAL RESEARCH LABORATORY - SSC
CONTRACTS CODE 3235, BLDG. 1008
STENNIS SPACE CENTER, MS 39529-5004

8. NAME AND ADDRESS OF CONTRACTOR (No., street, county, State and ZIP Code)

TO ALL OFFERORS

CODE | FACILITY CODE

(X) 9A. AMENDMENT OF SOLICIATION NO.

X N00173-07-R-RS01

9B. DATED (SEE ITEM 11) 04/02/07

10A. MODIFICATION OF CONTRACT/ORDER NO.

10B. DATED (SEE ITEM 11)

11. THIS ITEM ONLY APPLIES TO AMENDMENTS OF SOLICITATIONS

[X] The above numbered solicitation is amended as set forth in Item 14. The hour and date specified for receipt of Offers [ ] is extended, [X] is not extended.

Offers must acknowledge receipt of this amendment prior to the hour and date specified in the solicitation or as amended, by one of the following methods:

(a)By completing items 8 and 15, and returning 1 copies of the amendment; (b) By acknowledging receipt of this amendment on each copy of the offer submitted; or (c) By separate letter or telegram which includes a reference to the solicitation and amendment numbers. FAILURE OF YOUR ACKNOWLEDGMENT TO BE RECEIVED AT THE PLACE DESIGNATED FOR THE RECEIPT OF OFFERS PRIOR TO THE HOUR AND DATE SPECIFIED MAY RESULT IN REJECTION OF YOUR OFFER. If by virtue of this amendment your desire to change an offer already submitted, such change may be made by telegram or letter, provided each telegram or letter makes reference to the solicitation and this amendment, and is received prior to the opening hour and date specified.

12. ACCOUNTING AND APPROPIRATION DATA (If required)

13. THIS ITEM ONLY APPLIES TO MODIFICATION OF CONTRACTS/ORDERS. IT MODIFIES THE CONTRACT/ORDER NO. AS DESCRIBED IN ITEM 14.

CHECK ONE	
	A. THIS CHANGE ORDER IS ISSUED PURSUANT TO: (Specify authority) THE CHANGES SET FORTH IN ITEM 14 ARE MADE IN THE CONTRACT ORDER NO. IN ITEM 10A.
	B. THE ABOVE NUMBERED CONTRACT/ORDER IS MODIFIED TO REFLECT THE ADMINISTRATIVE CHANGES (such as changes in paying office, appropriation date, etc.) SET FORTH IN ITEM 14, PURSUANT TO THE AUTHORITY OF FAR 43.103(b).
	C. THIS SUPPLEMENTAL AGREEMENT IS ENTERED INTO PURSUANT TO AUTHORITY OF:
	D. OTHER (Specify type of modification and authority)

E. IMPORTANT: Contractor [ ] is not, [ ] is required to sign this document and return ——— copies to the issuing office.

14. DESCRIPTION OF AMENDMENT/MODIFICATION (Organized by UCF section headings, including solicitation/contract subject matter where feasible.)

SEE PAGES 2 AND 3

Except as provided herein, all terms and conditions of the document referenced in Item 9A or 10A, as heretofore changed, remains unchanged and in full force and effect.

15A. NAME AND TITLE OF SIGNER (Type or print)		16A. NAME AND TITLE OF CONTRACTING OFFICER (Type or print)	
15B. CONTRACTOR/OFFEROR (Signature of person authorized to sign)	15C. DATE SIGNED	16B. UNITED STATES OF AMERICA (Signature of Contracting Officer)	16C. DATE SIGNED

The purpose of this Amendment is to answer technical questions submitted in response to RFP Number N00173-07-R-RS01.

Question 1: Attachment 1, page 6. The block diagram is not legible. Please provide a clearer copy of the diagram

Answer 1: See Attachment 1 to this Amendment.

Question 2: The Time of Delivery on Page 5, Section F-2 of the Solicitation, is not consistent with Attachment 1, Section E-Schedule of Performance, on Page 10 of the Attachment. Which prevails?

Question 2: Section F-2 of the Solicitation prevails.
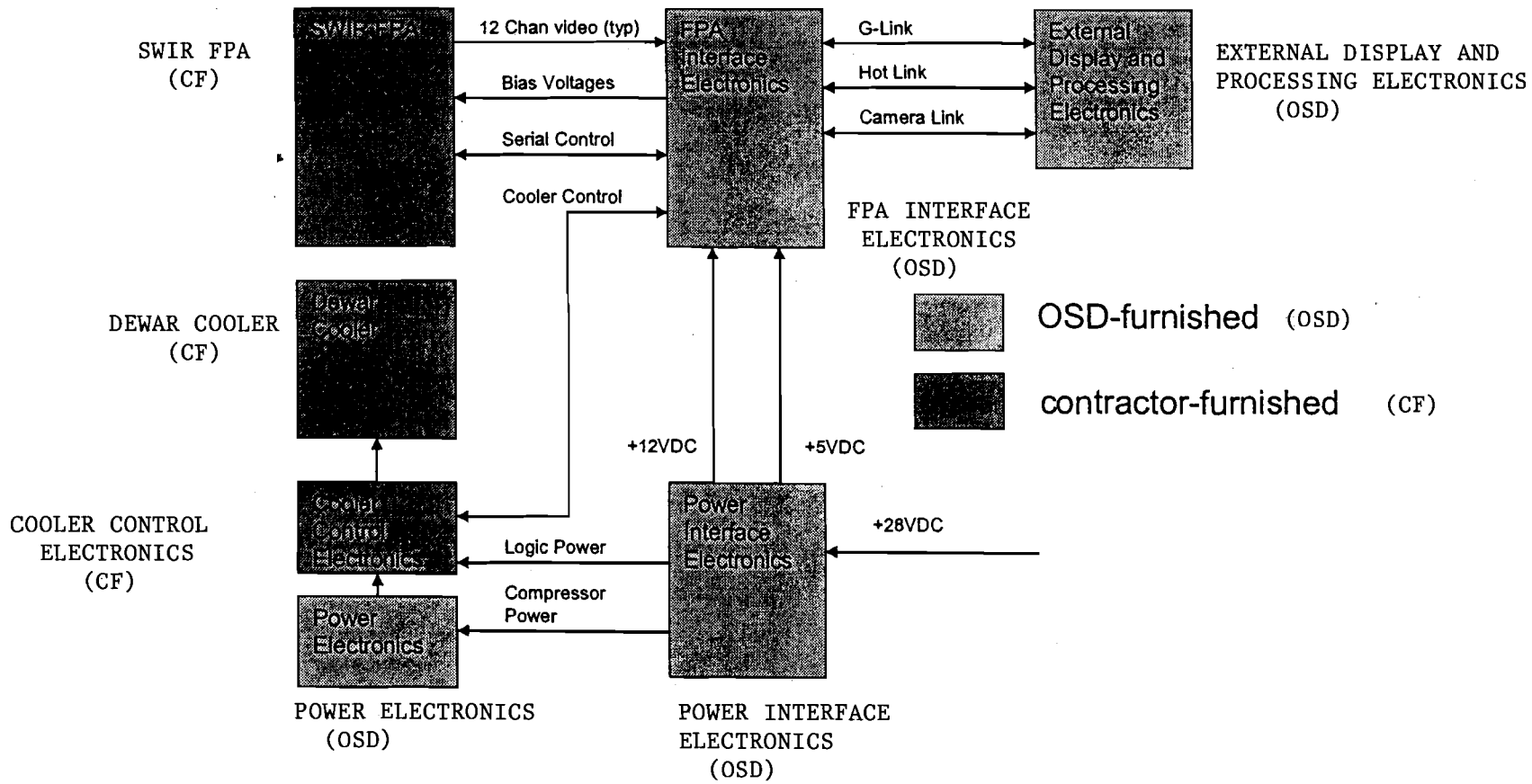
The following figure conveys OSD's concept of the block diagram of the external electronics in relation to the contractor-furnished equipment.