V80H Wafer Mount for 3” Wafers

Disk Stock 0.081” +/- 0.001” Thick

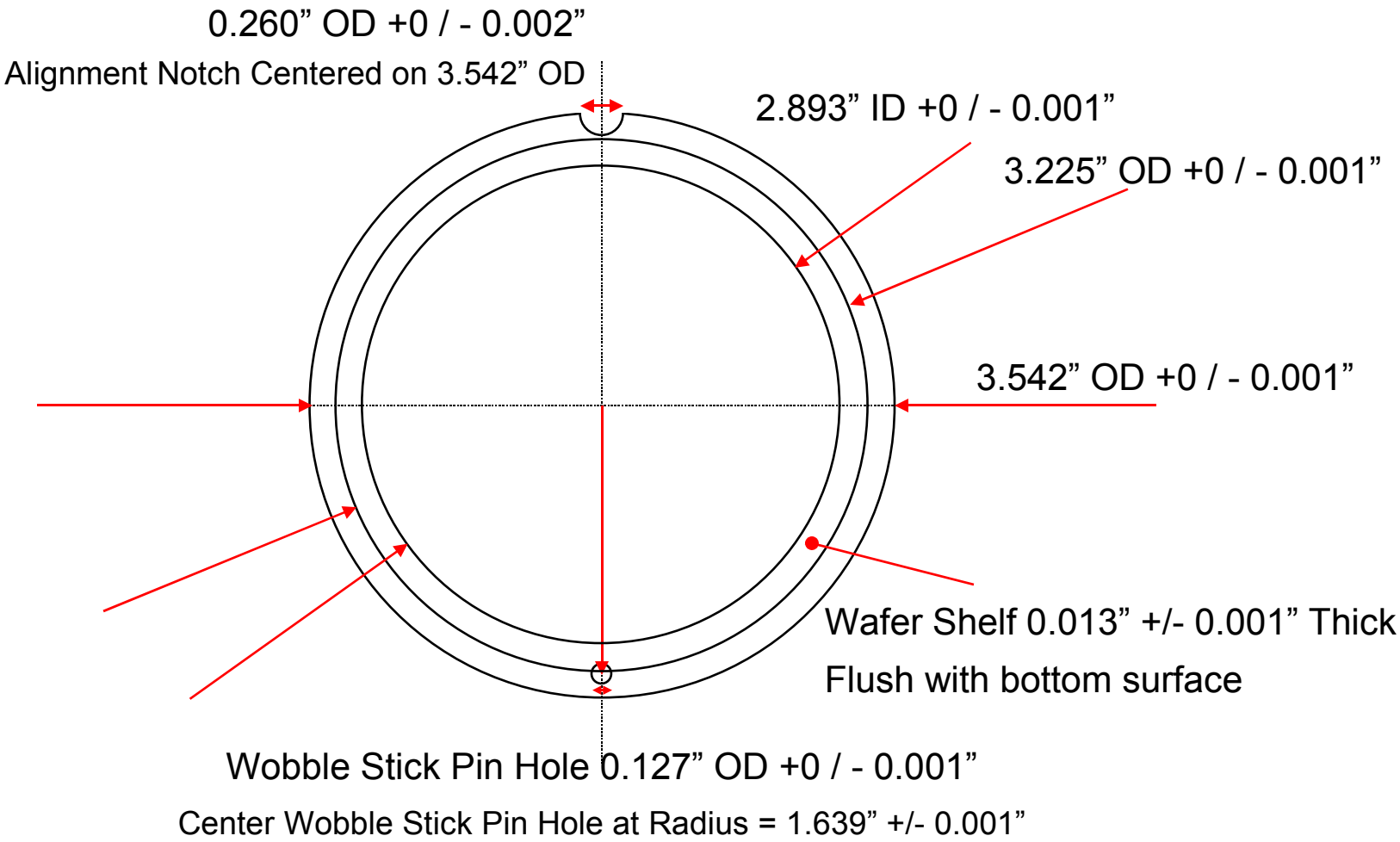

V80H Preparation Chamber

- Transfer Track Extends Wafer Center ~ 15.5” from face of 8” CF flange.
- 8” CF Flange Offset ~ 2.44” from CL of ~ 12” OD Preparation Chamber
- Wafer Platform on Transfer Track ~ 47” off floor.

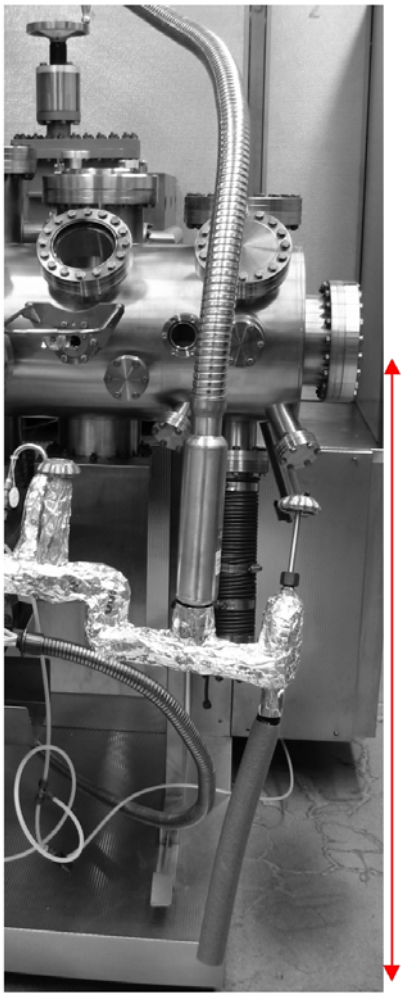

~ 47”

~ 2.5”

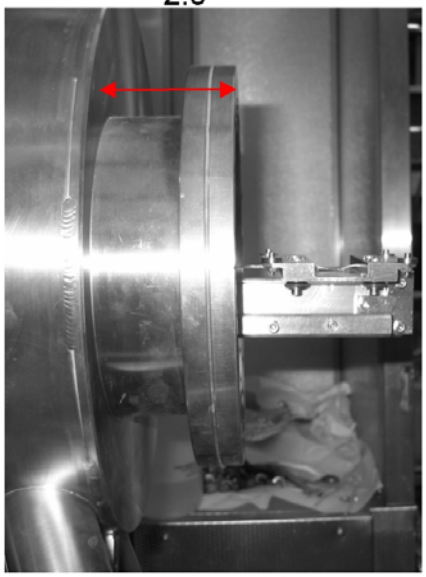

V80H Preparation Chamber

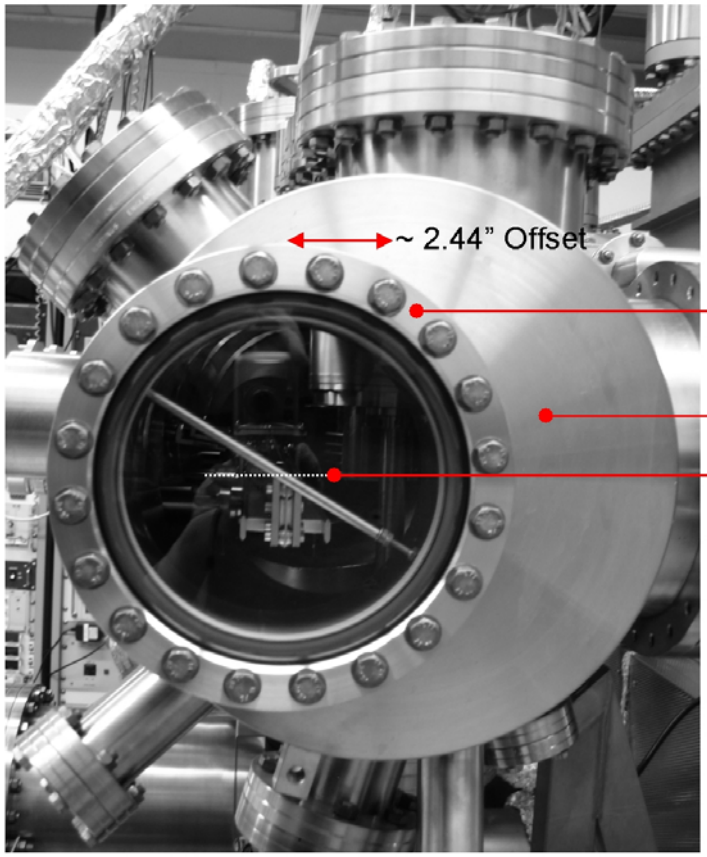

- Transfer Track Extends Wafer Center ~ 15.5” from face of 8” CF flange.
- 8” CF Flange Offset ~ 2.44” from CL of ~ 12” OD Preparation Chamber.
- Wafer Platform on Transfer Track ~ 47” off floor.

- Wafer Mounts hold substrate Face Down.
- Wafers Mounts are “parked” in a 10-position cassette in the Preparation Chamber.

V80H Preparation Chamber
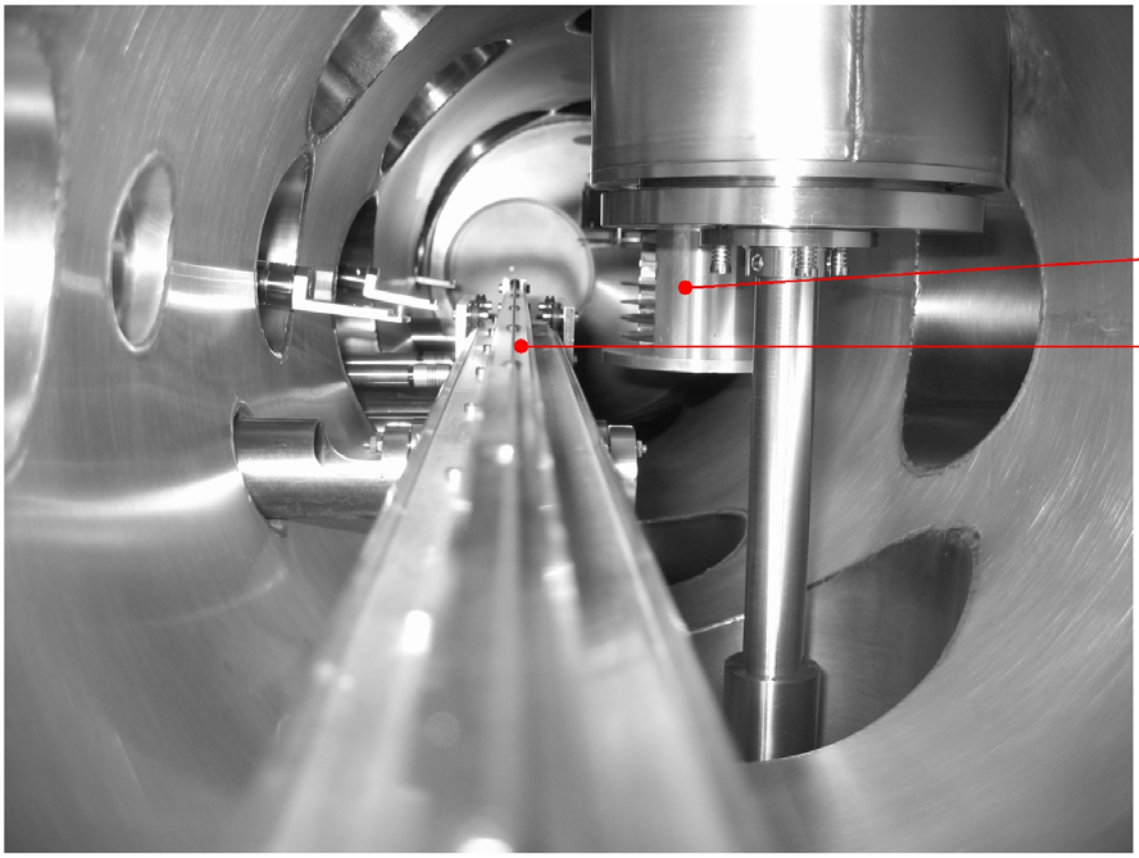
- Wafer Mounts hold substrate Face Down.
- Wafers Mounts are “parked” in a 10-position cassette in the Preparation Chamber.